OLD FILE NAME: 094287/A01

| PREPARED BY: | SANDIA NATIONAL LABORATORIES<br>FACILITIES ENGINEERING | DETAIL NO.: SF5005 |
|---|---|---|
| CHECKED BY: | | SCALE: NONE |
| DATE: 6-15-01 / REV: | GAS CYLINDER WALL RACK | STRUCTURAL STANDARD |

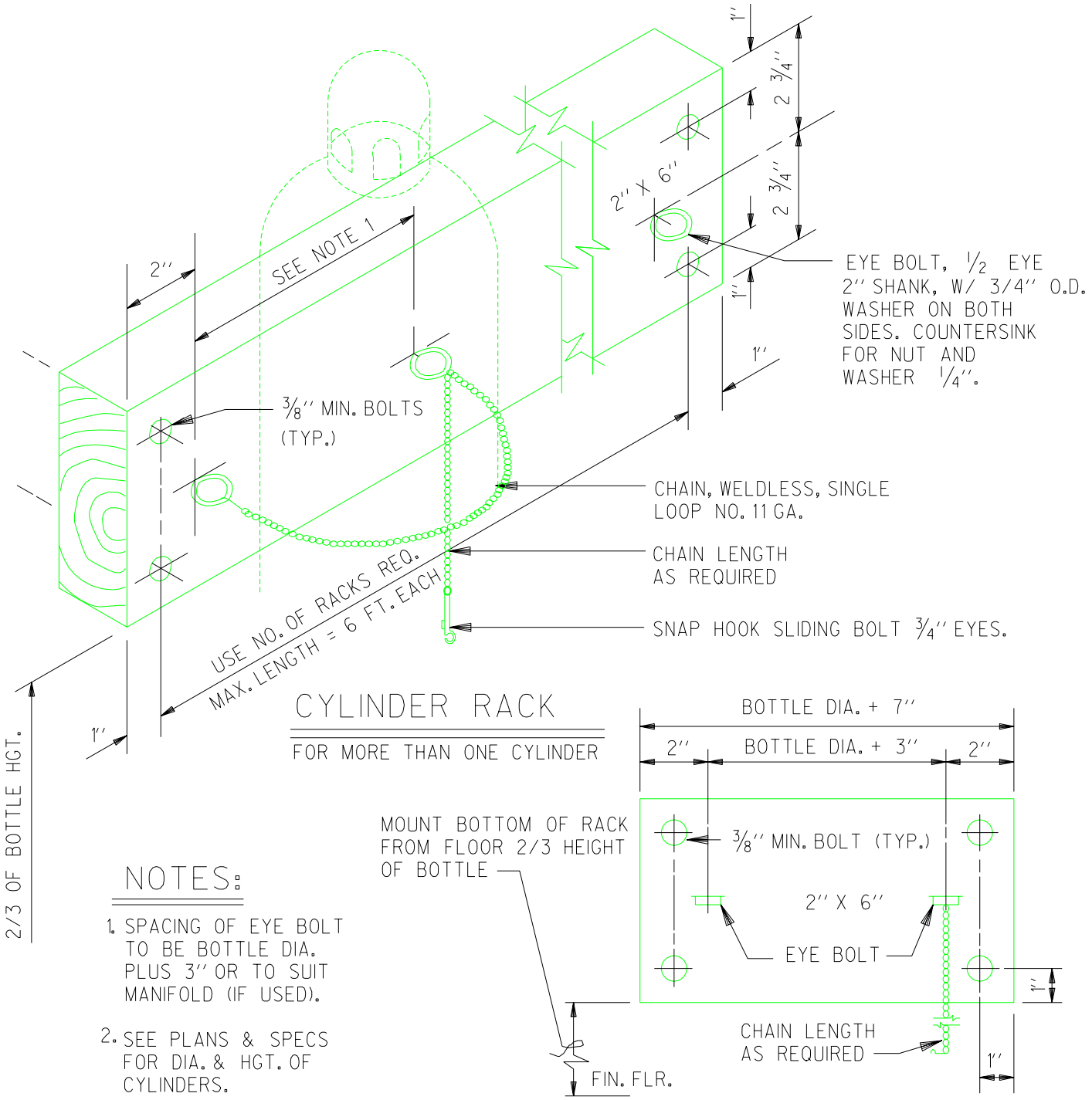


## NOTES:

1. SPACING OF EYE BOLT TO BE BOTTLE DIA. PLUS 3'' OR TO SUIT MANIFOLD (IF USED).
2. SEE PLANS & SPECS FOR DIA. & HGT. OF CYLINDERS.

"Property of Sandia National Laboratories Facilities Management and Operation Center (FMOC).
No duplication or alteration allowed without the expressed permission and authorization of FMOC."