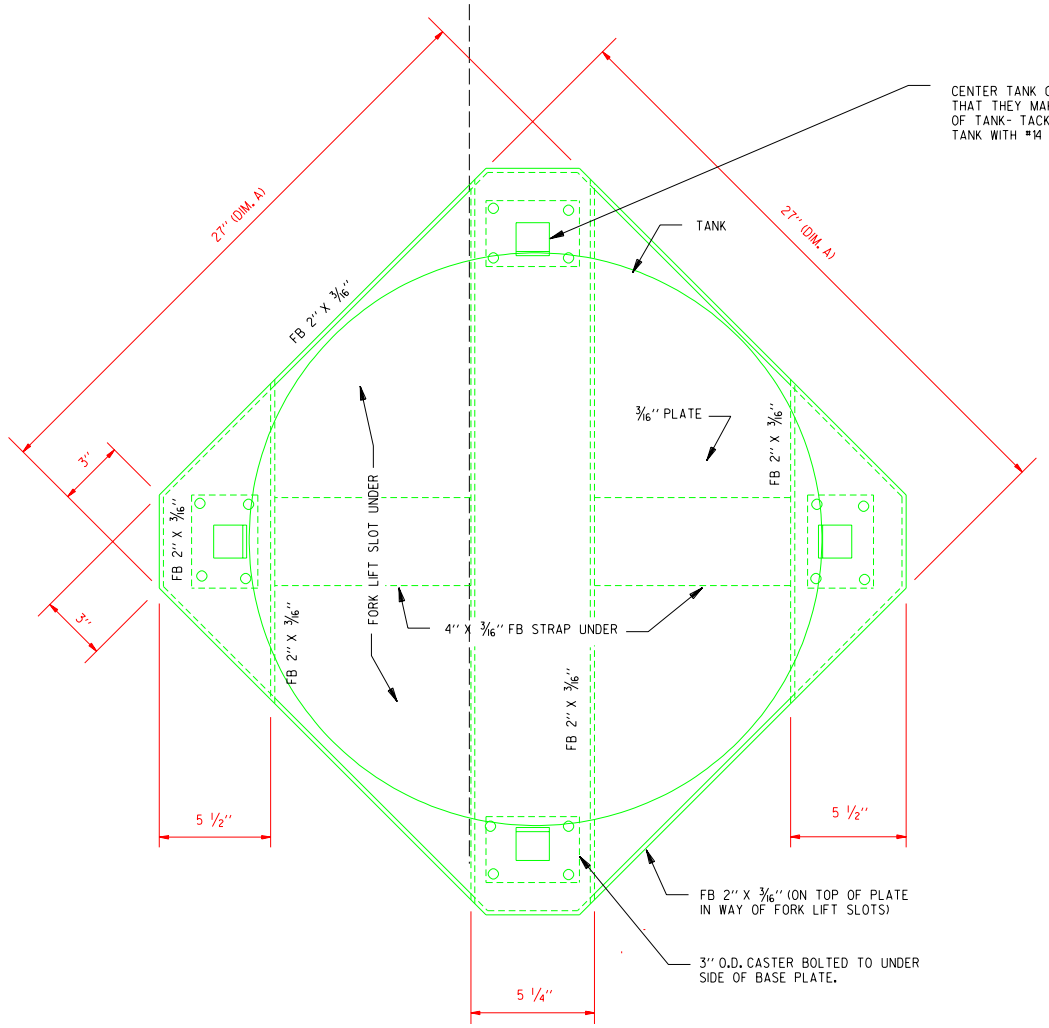

PLAN

SCALE: NONE

NOTE:

FABRICATE 8 EA. 27'' SQ. (DIM. A)
FABRICATE 4 EA. 24'' SQ. (DIM. A)
ALL OTHER DIMS. REMAIN SAME ON BOTH TYPES.

PAINT ALL NEW STEEL WITH ONE COAT METAL PRIMER & FINISH WITH TWO COATS "LIGHT GREY" ENAMEL.

BILL OF MATERIALS

ORIG. QUANTITY	STOCK OR P.O.NO.	DESCRIPTION
240'	503069	STEEL F.B. 3/16'' X 2''
24'	503077	STEEL F.B. 3/16'' X 4''
8'	505209	STEEL L 1 1/2'' X 1 1/2'' X 3/16''
48 EA.	65261I	3'' O.D. CASTERS
60 ☐'	504319	STEEL PLATE 3/16'' (.1793)

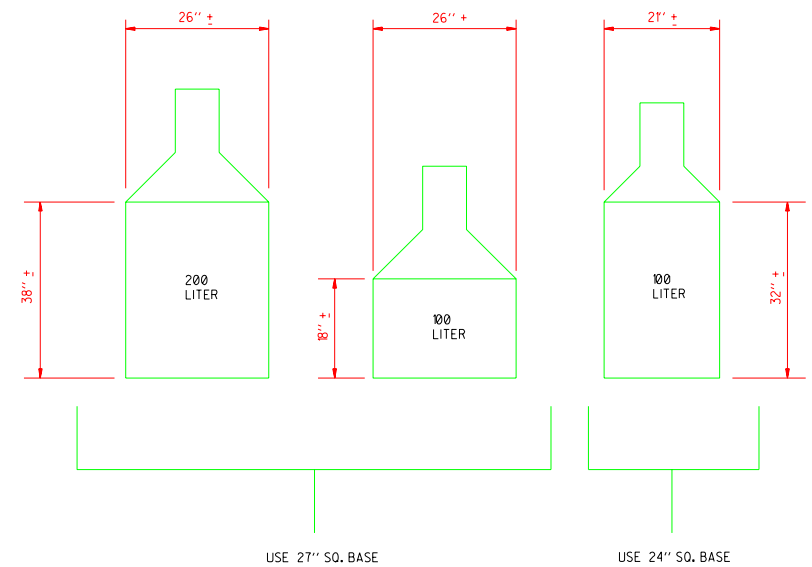

TANK TYPES

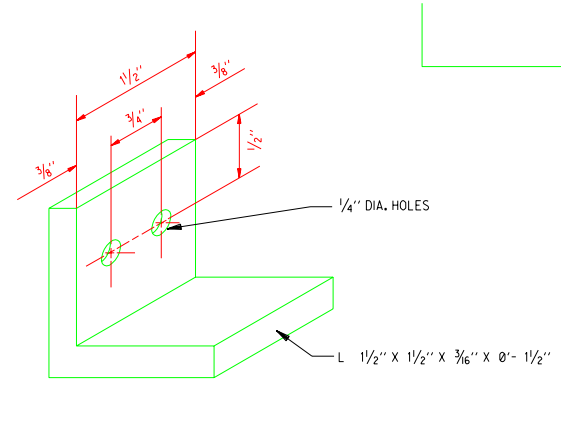

CLIP DETAIL ''A''

SCALE: NONE

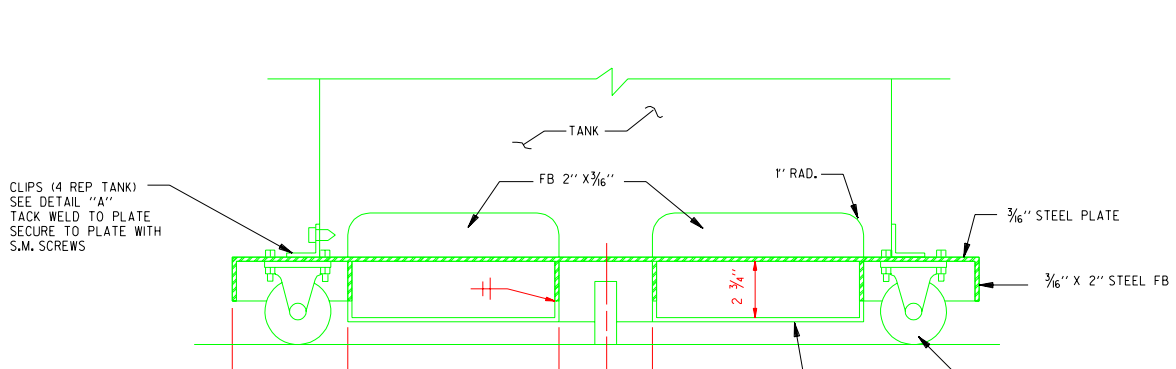

SECTION

SCALE: NONE

P.O. OR W.O. PROJECT NO.	REV	DATE	DESCRIPTION	DWN	CKD	APP
	△					
	△					
	△					
	△	6-15-01	UDS MODS	EG	FL	

U.S. DEPARTMENT OF ENERGY
KIRTLAND AREA OFFICE — ALBUQUERQUE, NEW MEXICO

SANDIA NATIONAL LABORATORIES
ALBUQUERQUE, NEW MEXICO; LIVERMORE, CALIFORNIA; TONOPAH, NEVADA

BASE PLATE FOR NITROGEN TANK DEWARS

P.O. OR W.O.
PROJECT NO.
DRAWN BY
CHECKED BY
APPROVED BY
DATE 12/6/63
SEQ.

OLD FILE NAME: 084718/A01

CAD DRAWING
COMPUTER SYSTEMS DEPT. 7901

STRUCTURAL FRAMING — STANDARD

SIZE D+ — DRAWING NO./SHEET SF5003STD

FILE NAME: SF5003STD.dgn
REFERENCE FILES: BORDER3.dgn

"Property of Sandia National Laboratories Facilities Management and Operation Center (FMOC). No duplication or alteration allowed without the expressed permission and authorization of FMOC."