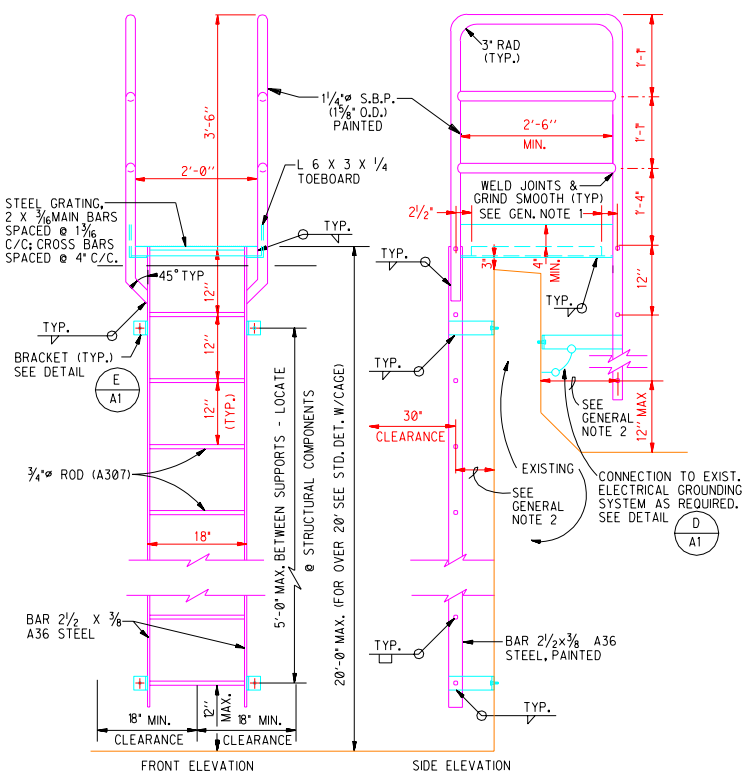

NOTE: PAINT ENTIRE LADDER WITH ONE (1) COAT METAL PRIMER & TWO (2) COATS ENAMEL, COLOR TO MATCH COLOR OF BUILDING WALLS.

ACCESS LADDER @ PARAPET WALL (A / A-1)

NOT TO SCALE

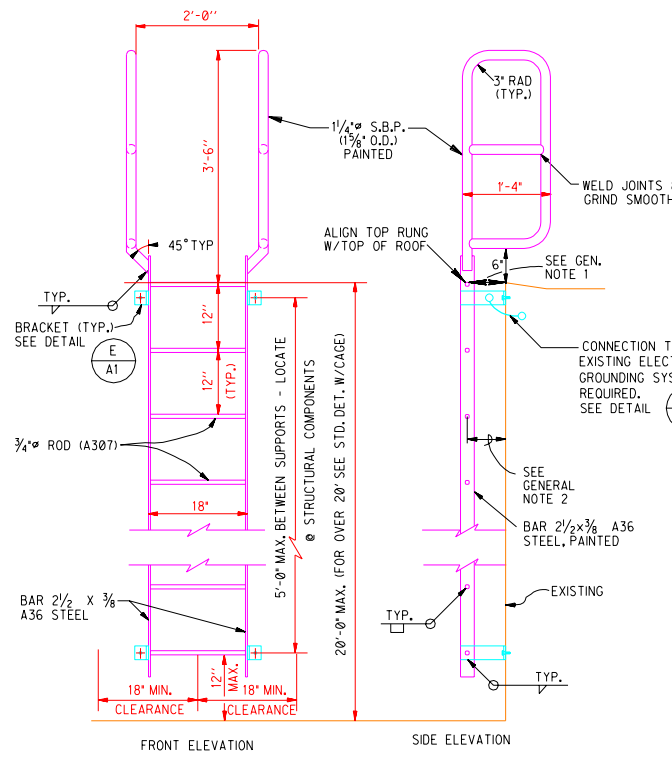

NOTE: PAINT ENTIRE LADDER WITH ONE (1) COAT METAL PRIMER & TWO (2) COATS ENAMEL, COLOR TO MATCH COLOR OF BUILDING WALLS.

ACCESS LADDER @ FLAT ROOF (B / A-1)

NOT TO SCALE

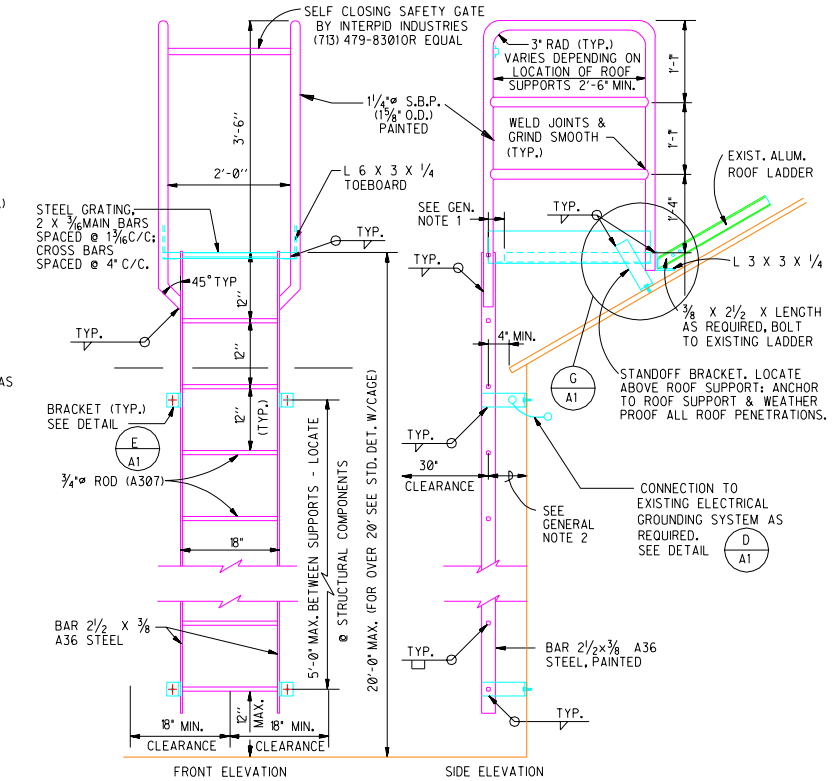

NOTE: PAINT ENTIRE LADDER WITH ONE (1) COAT METAL PRIMER & TWO (2) COATS ENAMEL, COLOR TO MATCH COLOR OF BUILDING WALLS.

ACCESS LADDER @ PITCHED ROOF (C / A-1)

NOT TO SCALE

GENERAL NOTES

1. STEP ACROSS DISTANCE FROM TOP RUNG TO PLATFORM SHALL BE 2½" MIN. TO 12" MAX.
2. THE DISTANCE FROM THE CENTERLINE OF LADDER RUNG TO THE NEAREST PERMANENT STRUCTURE SHALL BE NOT LESS THAN 7 INCHES, AND NO GREATER THAN 12 INCHES. A 12 INCH SEPARATION IS REQUIRED WHEN LOCATED IN AN EQUIPMENT ROOM.

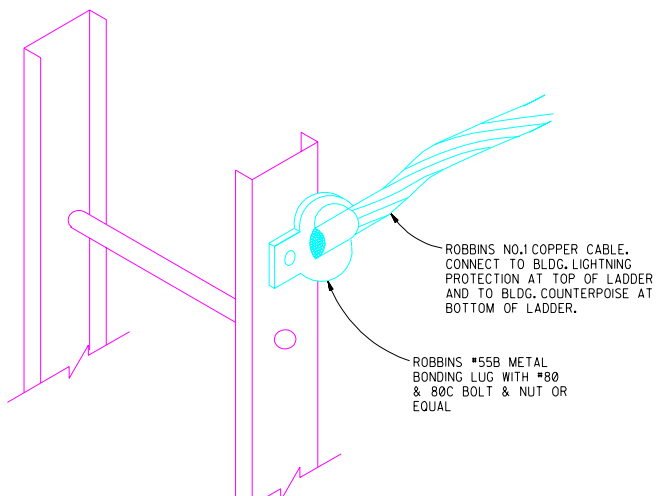

ELECTRICAL GROUND BOND DETAIL (D / A-1)

NOT TO SCALE

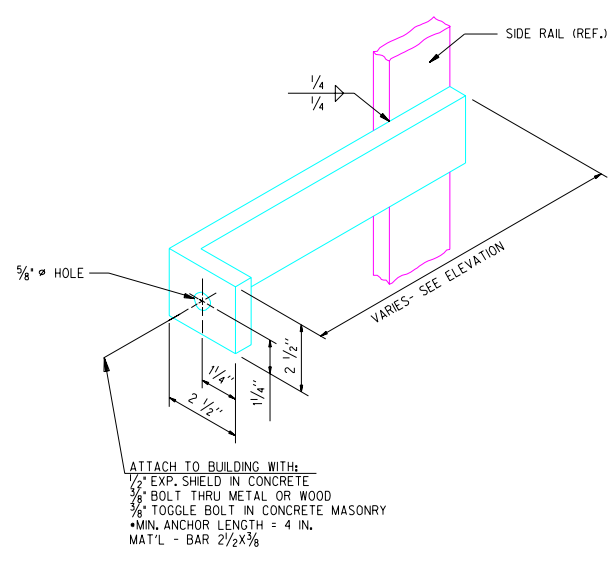

STANDOFF BRACKET DETAIL (E / A-1)

NOT TO SCALE

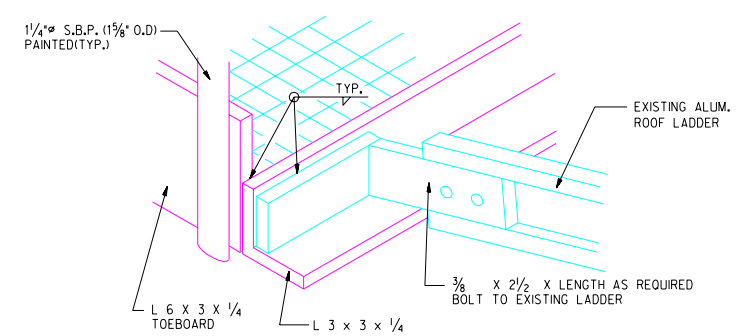

PLATFORM TO ROOF LADDER CONNECTION (F / A-1)

NOT TO SCALE

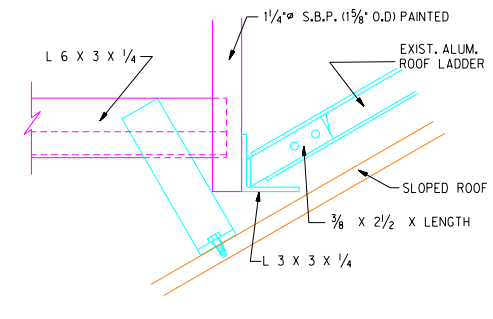

SIDE VIEW OF LADDER CONNECTION (G / A-1)

NOT TO SCALE

P.O. / PROJECT NO.	REV	DATE	DESCRIPTION	DWN	CKD	APP
		6-15-01	UDS MODS	EG	FL	
AW0168	A	7/93	UPDATE	MAJ	NUE	

U.S. DEPARTMENT OF ENERGY
KIRTLAND AREA OFFICE — ALBUQUERQUE, NEW MEXICO

SANDIA NATIONAL LABORATORIES

STEEL ACCESS LADDER ELEVATIONS & DETAIL	P.O.	
	PROJECT NO.	7881-90-11
	DRAWN BY	MAJ
	CHECKED BY	DJ
	SNL ENGR	ILM
STRUCTURAL FRAMING — STANDARD	DATE	1/10/91
	SIZE D+ / DRAWING NO SF2002STD	SEQ.

OLD FILE NAME: 086238/A01

MICROSTATION FILE
FILE NAME: SF2002STD.dgn
REFERENCE FILES:

Property of Sandia National Laboratories Facilities Management and Operation Center (FMOC). No duplication or alteration allowed without the expressed permission and authorization of FMOC.