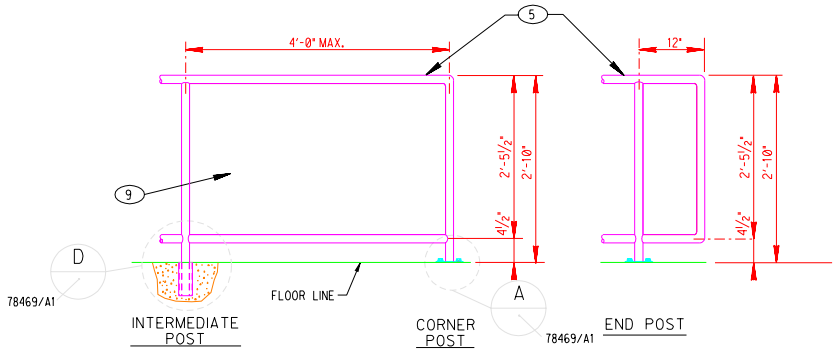

PIPE HANDRAIL DETAILS FOR BUSINESS & ASSEMBLY OCCUPANCIES

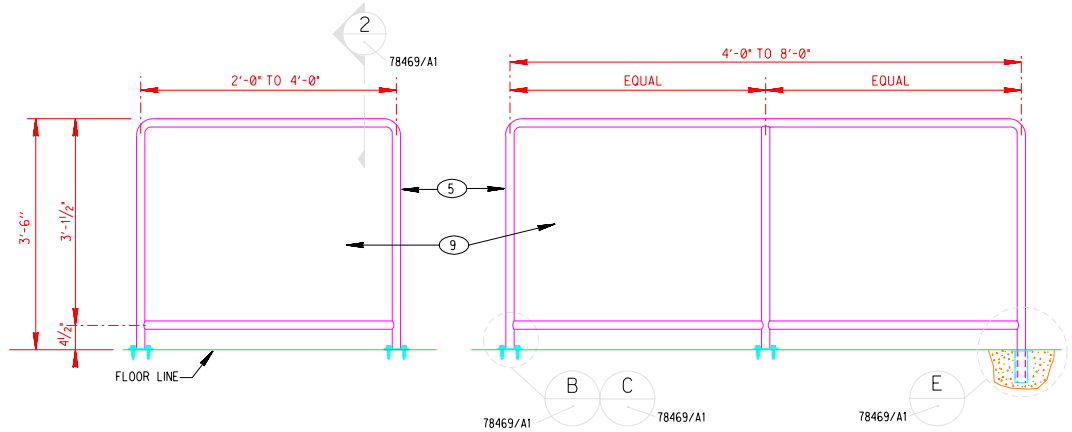

REMOVABLE PIPE GUARDRAIL DETAIL FOR BUSINESS & ASSEMBLY OCCUPANCIES

KEYED NOTES

1. ¼ X 4 X 4 STEEL PLATE
2. 2" PIPE SLEEVES (USE EXTRA STRONG PIPE AS REQUIRED)
3. ¼" PLATE FITTED TO SLEEVE WITH ¼" ø HOLE IN CENTER, WELD AND GRIND SMOOTH.
4. 5/16" ø THRU-BOLT W/LOCK WASHERS EACH SIDE.
5. 1¼" ø STD. BLACK PIPE (1⅝" O.D.) SCHEDULE 40
6. ½" ø BOLT (TYP.)
7. BAR 2 x ¼ x 0'-5"
8. BAR 4 x ¼
9. ¾" - #13 EXPANDED METAL
10. BAR ¾ x ¼ CONTINUOUS 4 SIDES
11. PREFABRICATED HANDRAIL BRACKET
12. 1¼" ø STD BLACK PIPE (1⅝" O.D.) SCHED. 40 POST. (FILL SPACE BETWEEN POST AND SLEEVE WITH NON-SHRINK, NON METALLIC GROUT.)
13. 2½" O.D. PIPE SLEEVE x 0'-6" LG.
14. STEEL PLATE ¼" X 3" CLOSURE.
15. PRECAST OR FABRICATED SLIP-FIT METAL SOCKET.

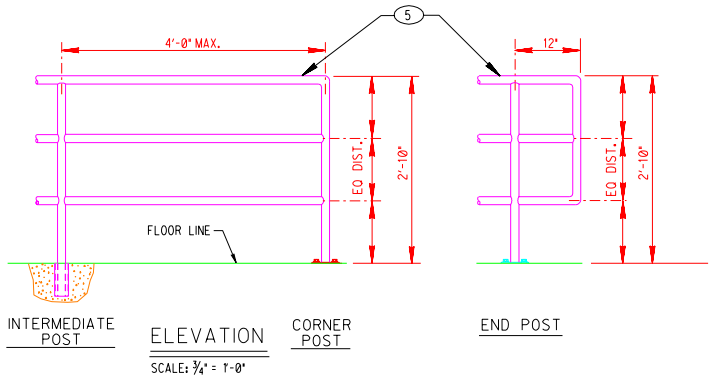

ELEVATION
SCALE: ¾" = 1'-0"

PIPE HANDRAIL DETAILS FOR INDUSTRIAL & STORAGE OCCUPANCIES

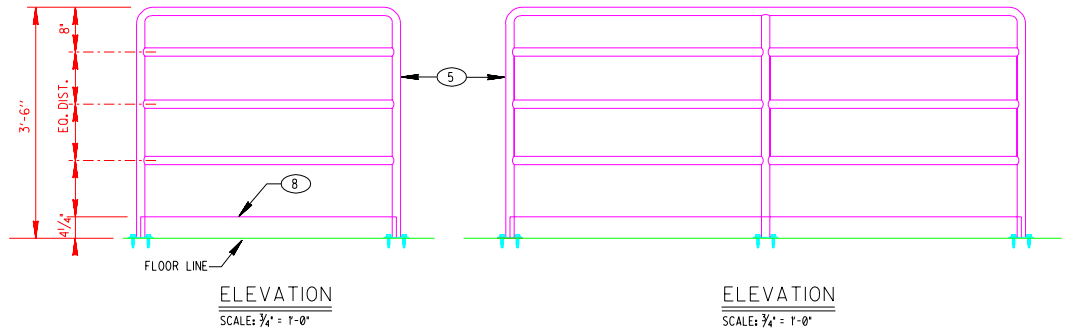

ELEVATION
SCALE: ¾" = 1'-0"

ELEVATION
SCALE: ¾" = 1'-0"

REMOVABLE PIPE GUARDRAIL DETAIL FOR INDUSTRIAL & STORAGE OCCUPANCIES

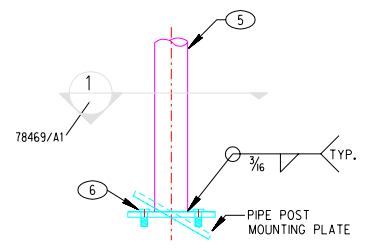

DETAIL FOR MOUNTING PLATE (A)
SCALE: 3" = 1'-0"
78469/A1

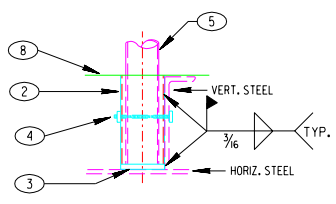

DETAIL FOR VERT. OR HORIZ. STEEL ATTACHMENT (B)
SCALE: 3" = 1'-0"
78469/A1
ALT.

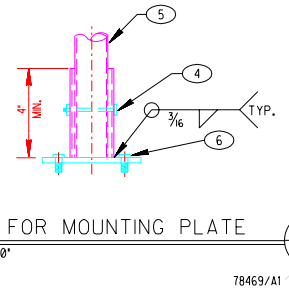

DETAIL FOR MOUNTING PLATE (C)
SCALE: 3" = 1'-0"
78469/A1

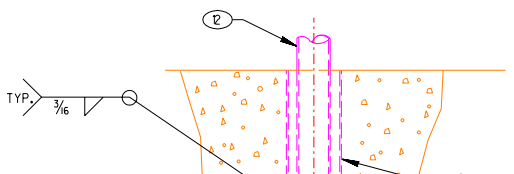

DETAIL FOR FIXED HANDRAIL POSTS (D)
SCALE: 3" = 1'-0"
78469/A1

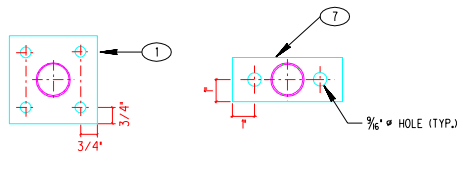

PLAN - MOUNTING PLATE 4-BOLT OR 2-BOLT ANCHORED (1)
SCALE: 3" = 1'-0"
78469/A1

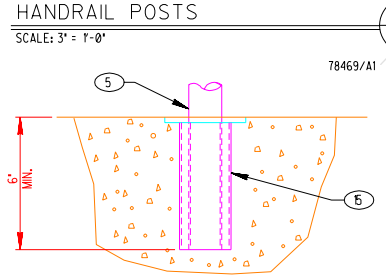

DETAIL FOR REMOVABLE RAILING POSTS (E)
SCALE: 3" = 1'-0"
78469/A1

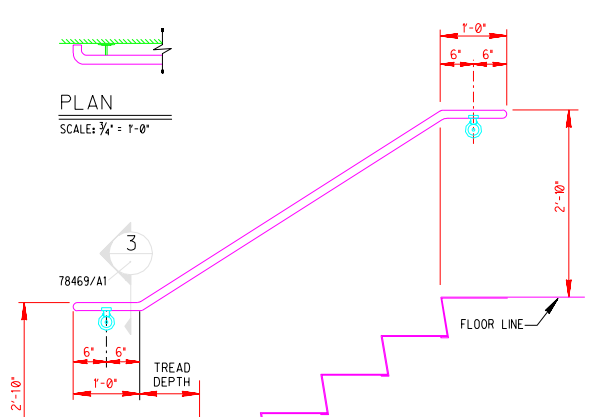

ELEVATION
SCALE: ¾" = 1'-0"

PIPE WALL MOUNT HANDRAIL DETAILS

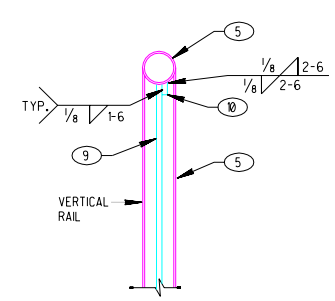

SECTION (2)
SCALE: 3" = 1'-0"
78469/A1

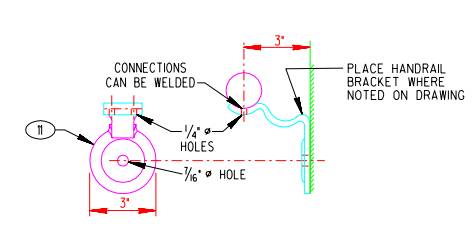

SECTION (3)
SCALE: 3" = 1'-0"
78469/A1

P.O. / PROJECT NO.	REV	DATE	DESCRIPTION	DWN	CKD	APP
	C					
	B	6-15-01	UDS MODS	EG	FL	
AW0168	A	7/93	UPDATE	MAJ	NUE	
CG397		9/92	REVISE PER CODE UPDATE	WC MAJ	ILM	

U.S. DEPARTMENT OF ENERGY
KIRTLAND AREA OFFICE — ALBUQUERQUE, NEW MEXICO

SANDIA NATIONAL LABORATORIES

PIPE HANDRAILS/GURADRAILS

P.O.	
PROJECT NO.	
DRAWN BY	MAJ
CHECKED BY	JRR
SNL ENGR	ILM
DATE	4/1/91
SEQ.	

STRUCTURAL FRAMING — STANDARD

SIZE: D+ — DRAWING NO: SF2001STD

OLD FILE NAME: 078469/A01

MICROSTATION FILE
FILE NAME: SF2001STD.dgn
REFERENCE FILES:

"Property of Sandia National Laboratories Facilities Management and Operation Center (FMOC). No duplication or alteration allowed without the expressed permission and authorization of FMOC."