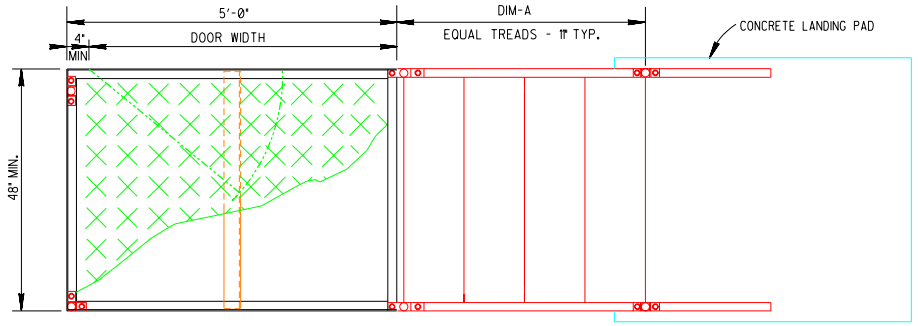

PLAN - LEFT OR RIGHT DOOR SWING

SCALE: 3/4"=1'-0"

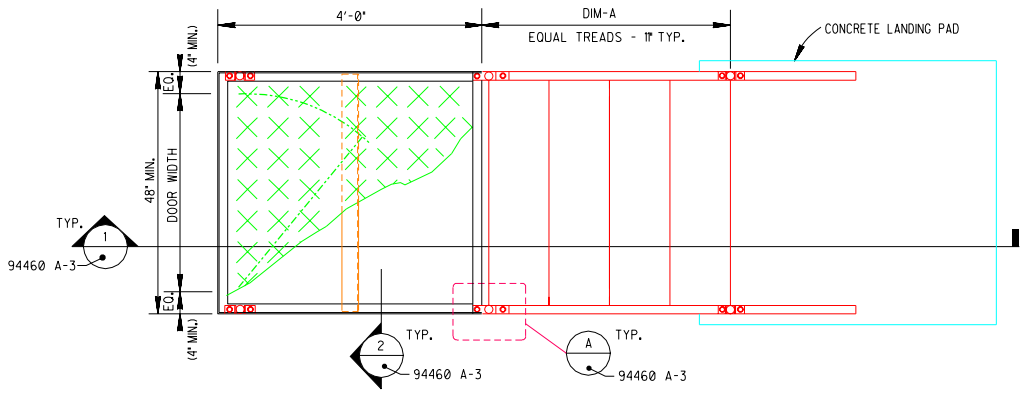

PLAN - STRAIGHT DOOR SWING

SCALE: 3/4"=1'-0"

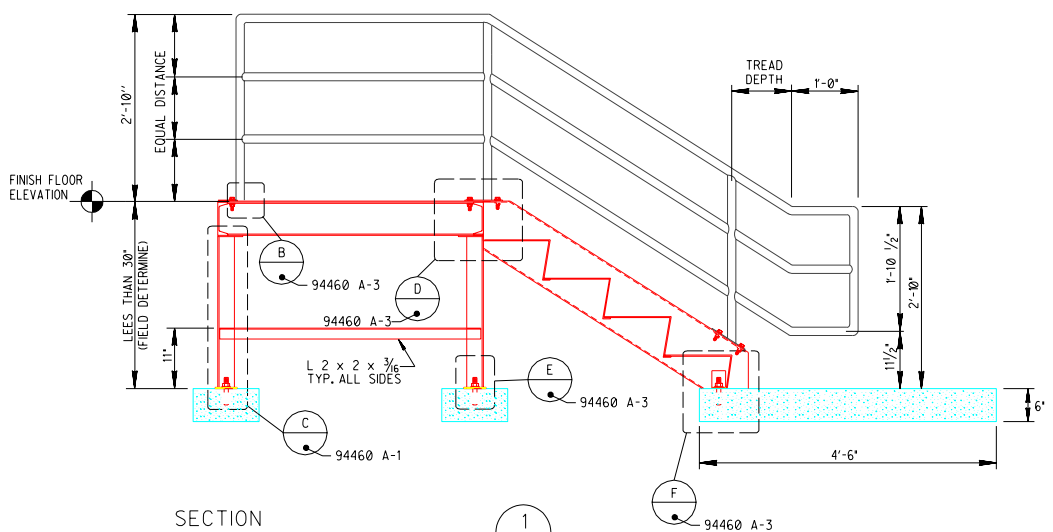

SECTION

SCALE: 3/4"=1'-0" 94460 A-1

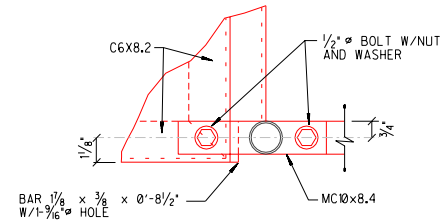

DETAIL

SCALE: 3"=1'-0" 94460 A-3

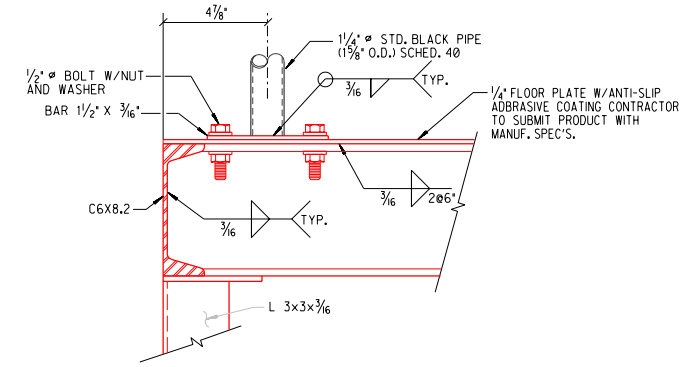

DETAIL

SCALE: 3"=1'-0" 94460 A-3

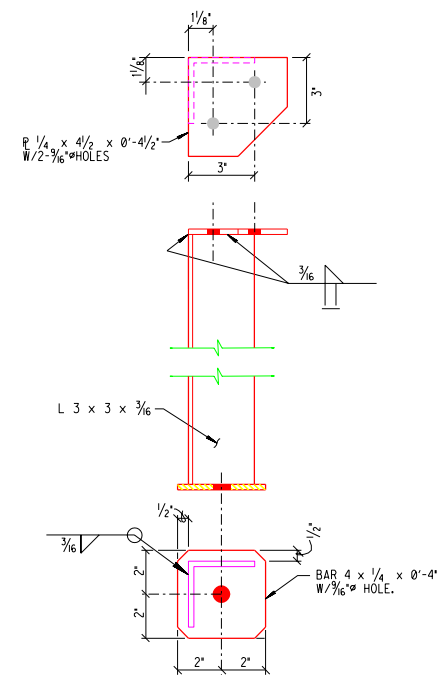

DETAIL

SCALE: 3"=1'-0" 94460 A-3

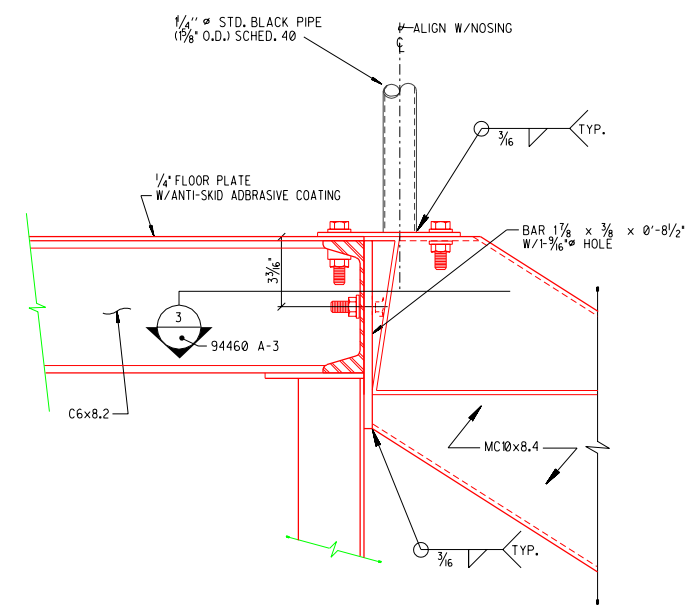

DETAIL

SCALE: 3"=1'-0" 94460 A-3

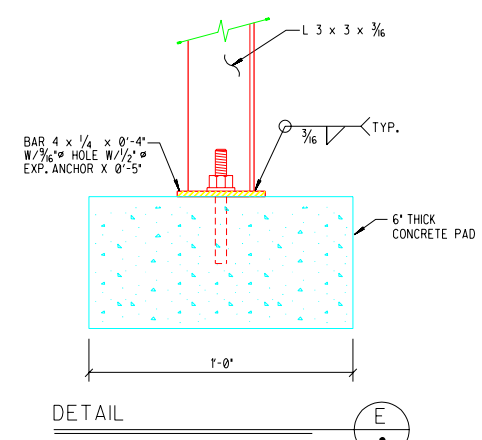

DETAIL

SCALE: 3"=1'-0" 94460 A-3

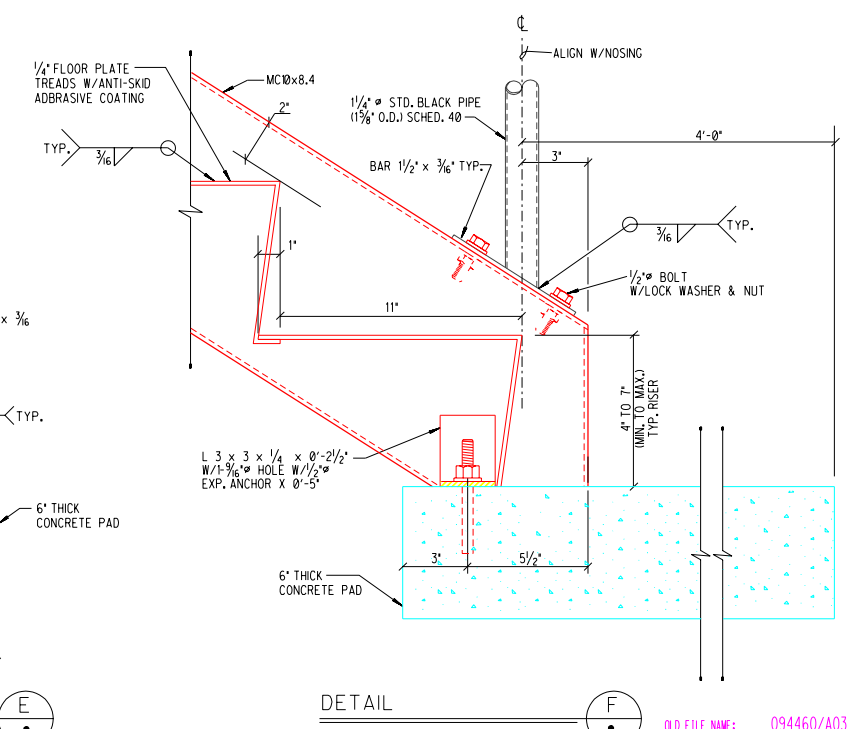

DETAIL

SCALE: 3"=1'-0" 94460 A-3

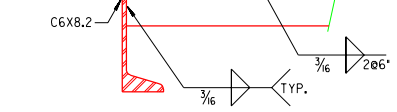

SECTION (TYP.)

SCALE: 3"=1'-0" 94460 A-3

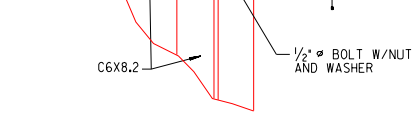

SECTION

SCALE: 3"=1'-0" 94460 A-3

GENERAL NOTES

1. THERE SHALL BE NO VARIATION EXCEEDING 3/16" IN THE DEPTH OF ADJACENT TREADS OR IN THE HEIGHT OF ADJACENT RISERS, & THE TOLERANCE BETWEEN THE LARGEST AND SMALLEST RISER OR TREAD SHALL NOT EXCEED 3/8" IN ANY FLIGHT.
2. WHERE THE BOTTOM RISER ADJOINS A SLOPING PUBLIC WAY, WALK, OR DRIVEWAY HAVING AN ESTABLISHED GRADE & SERVING AS A LANDING, A VARIATION IN HEIGHT OF THE BOTTOM RISER OF NOT MORE THAN 3" IN EVERY 3 FT. OF STAIRWAY WIDTH IS PERMITTED.
3. HANDRAIL EXTENSIONS ø BOTTOM OF STAIRS SHALL NOT PROJECT MORE THAN 4" INTO WALKS THAT PASS IN FRONT OF STAIRS, NOR SHALL THEY REDUCE THE CLEAR WIDTH OF AN ACCESSIBLE ROUTE.
4. CONTRACTORS TO FIELD MEASURE HEIGHT OF STAIR FROM FINISH GRADE TO FINISH OF MOBILE OFFICE TO DETERMINE NUMBER OF EQUAL RISERS OF THE STAIR. RISERS TO BE NO LESS THAN 4" AND NO MORE THAN 7". A 3/8" DIFFERENCE IN RISER MAX. IS ALLOWED BETWEEN THE FIRST RISER & SECOND RISER AT THE BOTTOM OF STAIR. THE TREAD RUN SHALL NOT BE LESS THAN 11".
5. CONTRACTOR TO SUBMIT SHOP DRAWINGS, DETAILS PER AISC.
6. PLATFORM ELEVATION TO BE THE SAME AS FLOOR ELEVATION OF TRAILER OR BUILDING.
7. ALL BUTT WELDS TO BE GROUND SMOOTH.

P.O. / PROJECT NO.	REV	DATE	DESCRIPTION	DWN	CKD	APP
		6-15-01	UDS MODS	EG	FL	
AW0168	A	7/93	UPDATE	MAJ	NUE	

U.S. DEPARTMENT OF ENERGY

KIRTLAND AREA OFFICE — ALBUQUERQUE, NEW MEXICO

SANDIA NATIONAL LABORATORIES

PLATFORMS & STAIRS LESS THAN 30" A.F.F.

P.O.	
PROJECT NO.	
DRAWN BY	MAJ
CHECKED BY	WC
SNL ENGR	ILM
DATE	9/92

STRUCTURAL FRAMING — STANDARD

SIZE D+ — DRAWING NO SF1006STD — SEQ.

OLD FILE NAME: 094460/A03

MICROSTATION FILE

FILE NAME: SF1006STD.dgn

REFERENCE FILES: BORDER.DGN

"Property of Sandia National Laboratories Facilities Management and Operation Center (FMOC). No duplication or alteration allowed without the expressed permission and authorization of FMOC."