GENERAL NOTES

1. SHOP PAINT WITH PRIMER AND 2 COATS BRIGHT YELLOW INDUSTRIAL ZINC ENAMEL- WOOD & METAL.
2. ROUND ALL SHARP CORNERS.
3. ALL WELDED CONSTRUCTION EXCEPT BOLT PLANKS TO ANGLE FRAME.
4. ALL WELDS TO BE ACCORDING TO AWS SPECIFICATIONS.

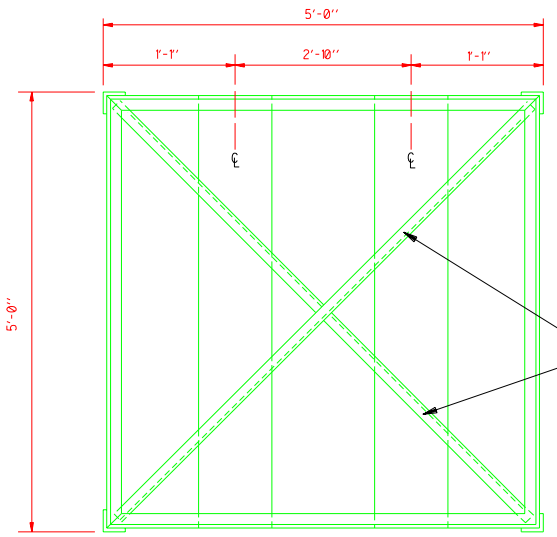

PLAN

SCALE: NONE

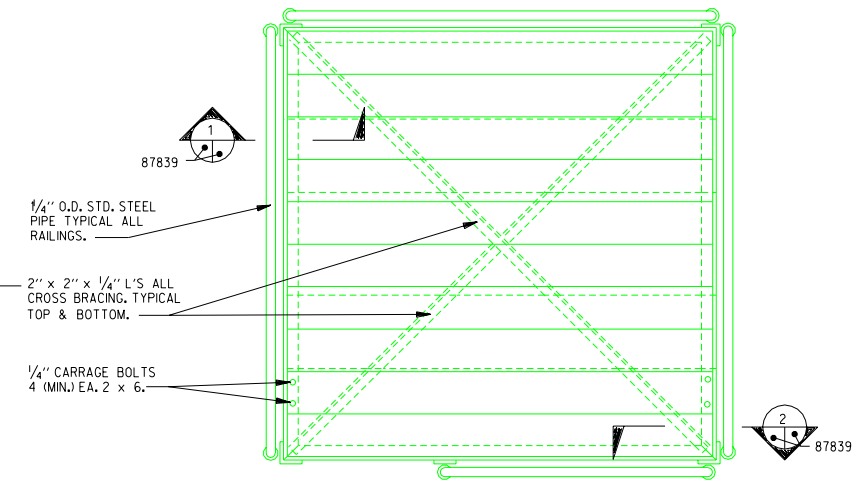

DECK PLAN

SCALE: NONE

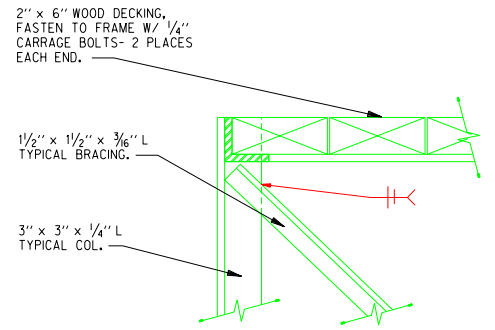

SECTION

SCALE: NONE

1
87839

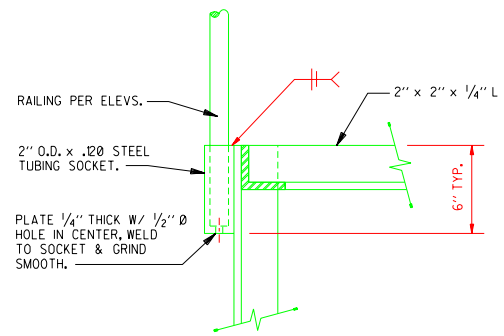

SECTION

SCALE: NONE

2
87839

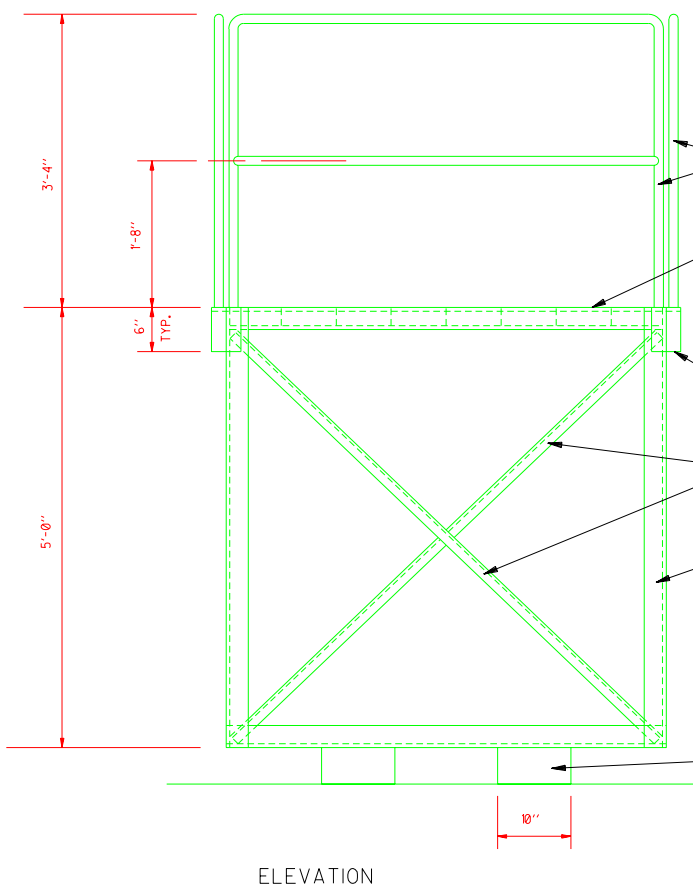

ELEVATION

SCALE: NONE

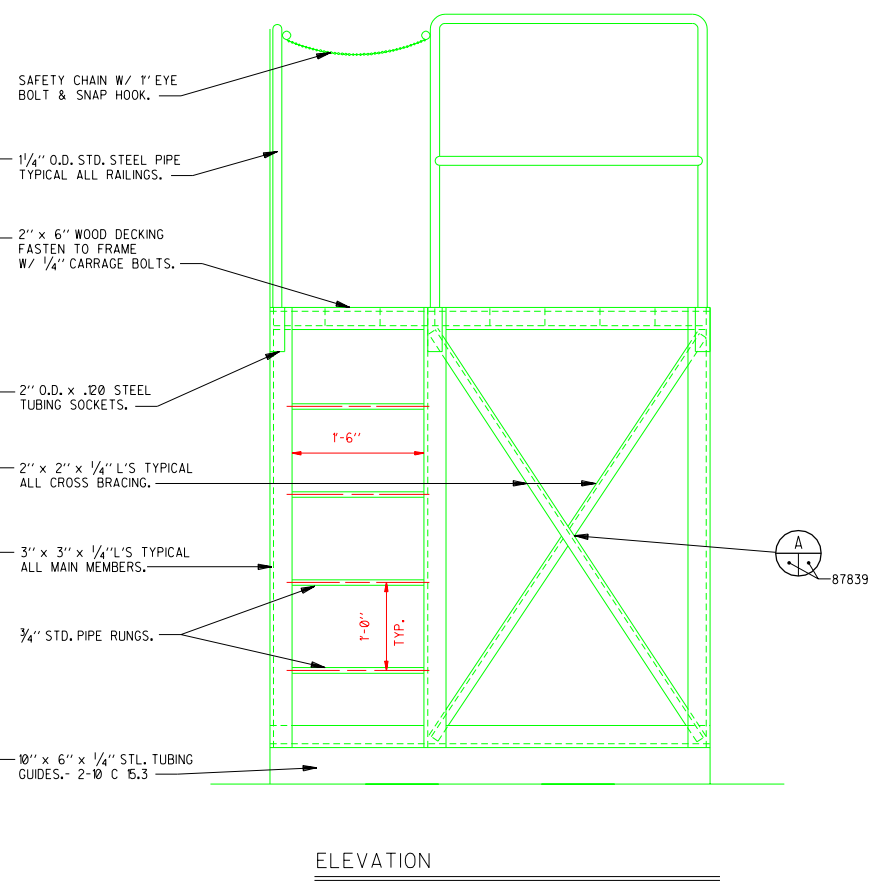

ELEVATION

SCALE: NONE

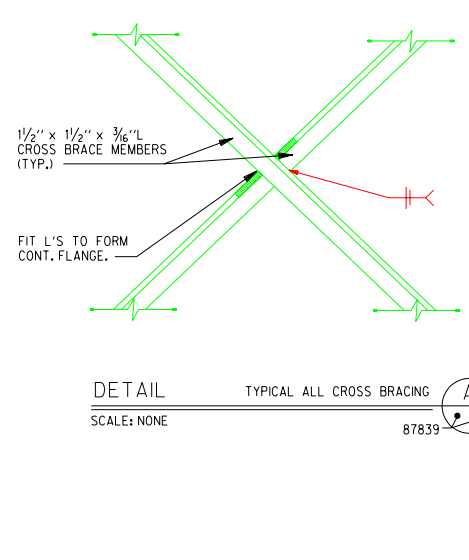

DETAIL TYPICAL ALL CROSS BRACING

SCALE: NONE

A
87839

P.O. OR W.O. / PROJECT NO.	REV	DATE	DESCRIPTION	DWN	CKD	APP
		6-15-01	UDS MODS	EG	FL	

U.S. DEPARTMENT OF ENERGY

KIRTLAND AREA OFFICE — ALBUQUERQUE, NEW MEXICO

SANDIA NATIONAL LABORATORIES

ALBUQUERQUE, NEW MEXICO; LIVERMORE, CALIFORNIA; TONOPAH, NEVADA

FORK LIFT PALLET PLANS,ELEVATION&DETAIL

P.O. OR W.O.
PROJECT NO.
DRAWN BY
CHECKED BY
APPROVED BY

OLD FILE NAME: 087839/A02

CAD DRAWING
COMPUTER SYSTEMS DEPT. 7901

FILE NAME: SF003STD.dgn

REFERENCE FILES:

STRUCTURAL FRAMING — STANDARD

DATE: 10/11/65

SIZE: D+ — DRAWING NO./SHEET: SF1003STD — SEQ.

"Property of Sandia National Laboratories Facilities Management and Operation Center (FMOC). No duplication or alteration allowed without the expressed permission and authorization of FMOC."