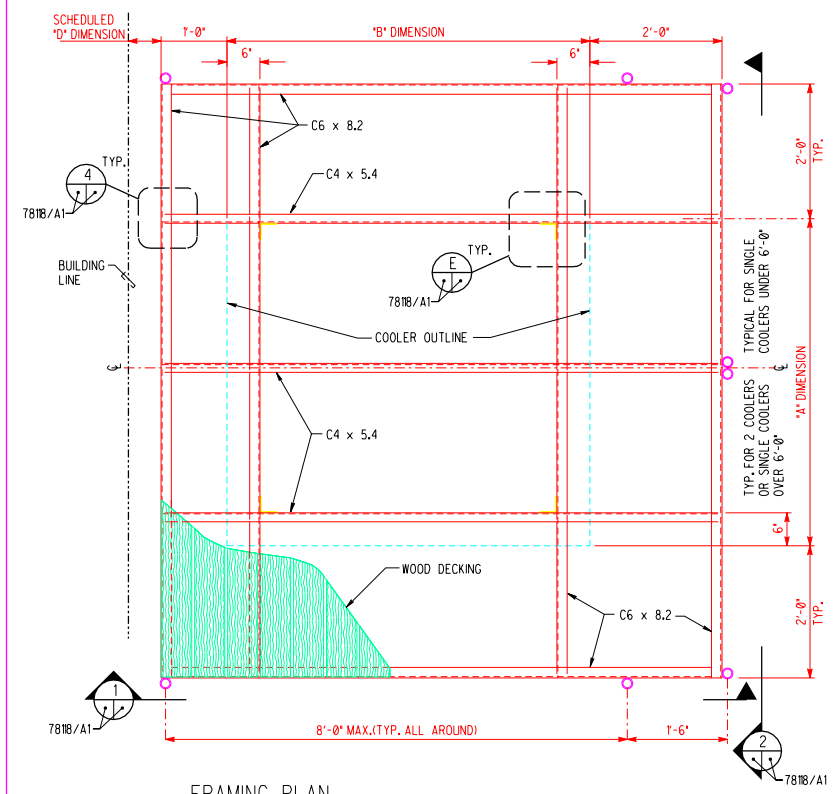

FRAMING PLAN

SCALE: 3/4" = 1'-0"

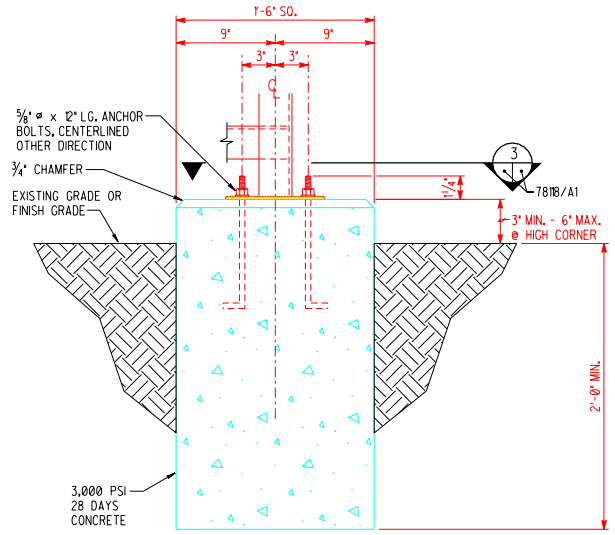

A DETAIL

SCALE: 1 1/2" = 1'-0"

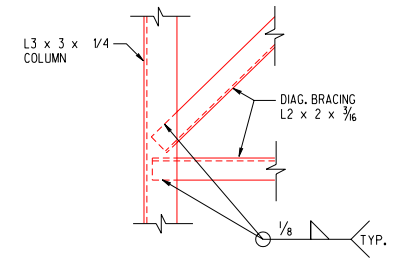

B DETAIL

SCALE: 1 1/2" = 1'-0"

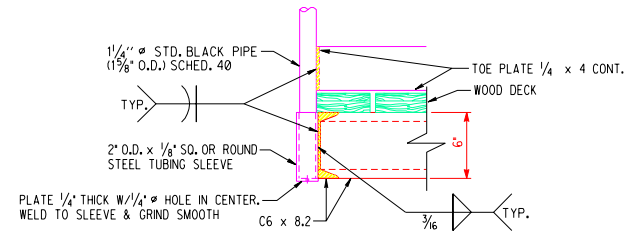

C DETAIL

SCALE: 1 1/2" = 1'-0"

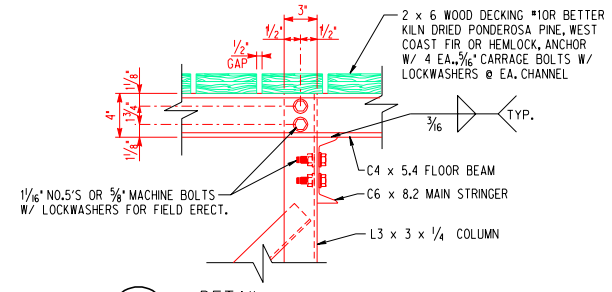

D DETAIL

SCALE: 1 1/2" = 1'-0"

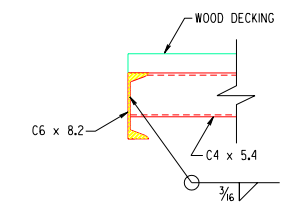

4 SECTION

SCALE: 1 1/2" = 1'-0"

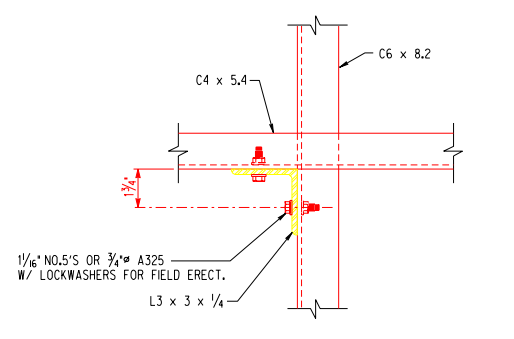

E DETAIL

SCALE: 3" = 1'-0"

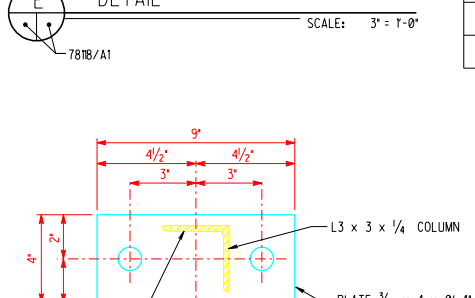

3 SECTION

SCALE: 3" = 1'-0"

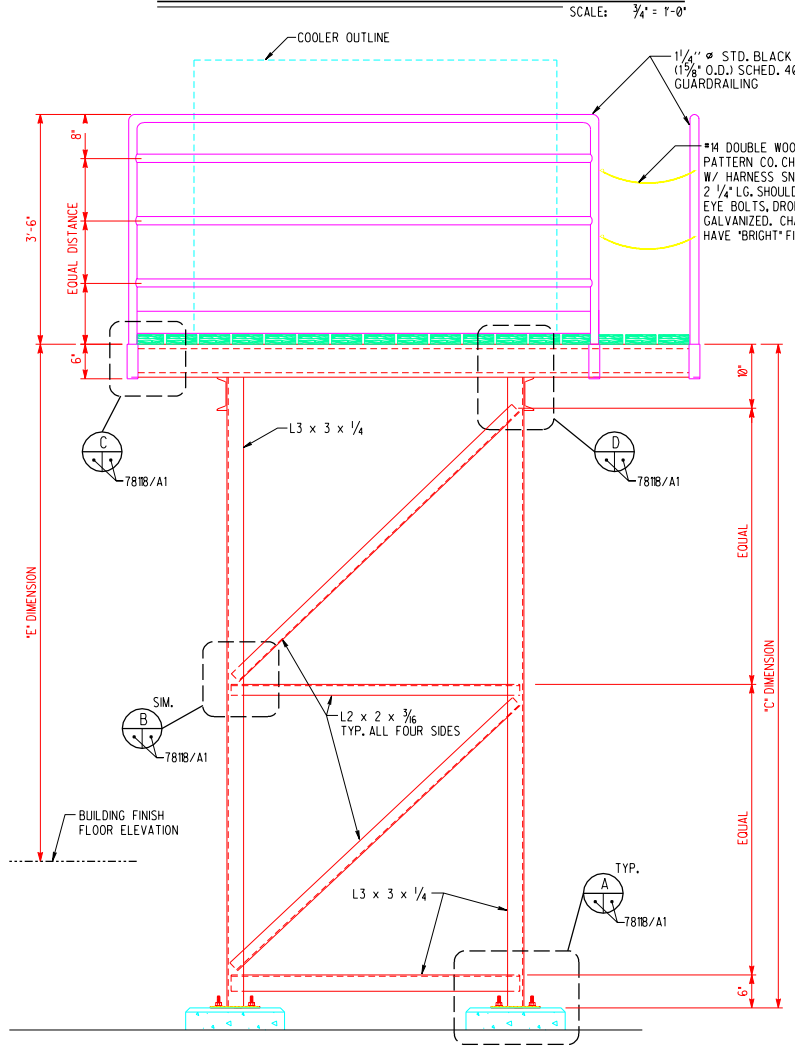

1 FRONT VIEW

SCALE: 3/4" = 1'-0"

78118/A1

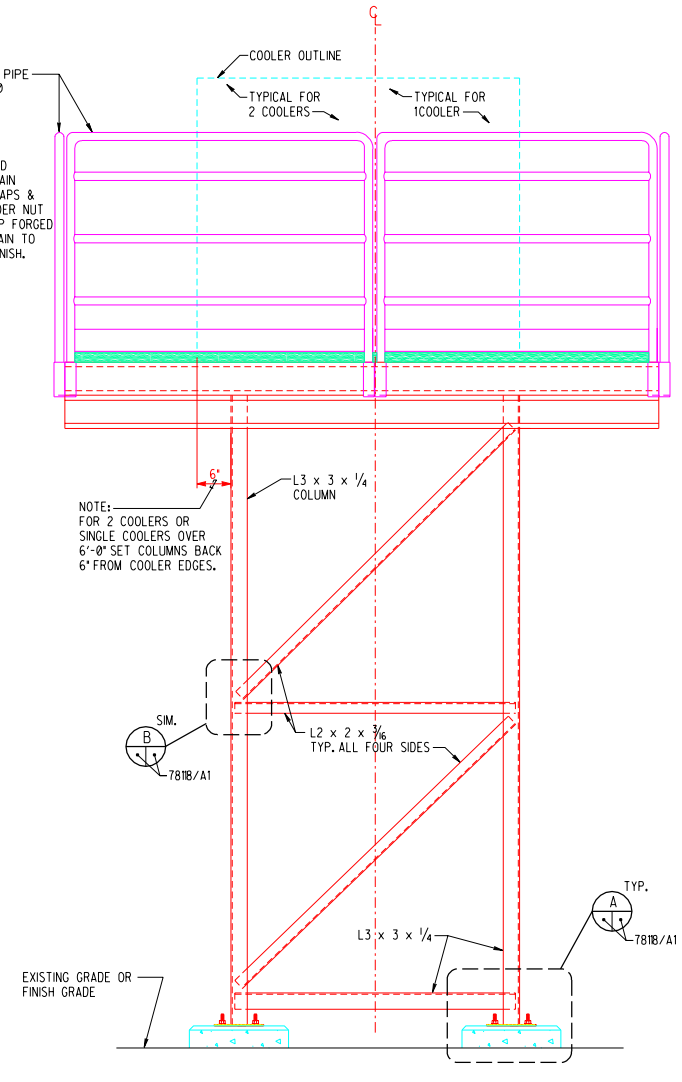

2 RIGHT SIDE VIEW

SCALE: 3/4" = 1'-0"

78118/A1

GENERAL NOTES

1. ALL STEEL SHALL RECEIVE ONE COAT OF SHOP PRIME. AFTER ERECTION AND WELDING IS COMPLETE, ENTIRE STEEL STRUCTURE AND RAILING SHALL BE PAINTED IN ACCORDANCE W/ SPECIFICATIONS.
2. WOOD DECKING SHALL BE PAINTED IN ACCORDANCE W/ SPECIFICATIONS.
3. DIMENSIONS "A", "B", "C" AND "D" ARE BASED ON SPECIFIED COOLER UNIT. DIMENSIONS SHALL BE MODIFIED AS INDICATED BY COOLER OUTLINE AND HEIGHT DIMENSIONS OTHER THAN SPECIFIED COOLER IS SUPPLIED.

SCHEDULED NOTES

PROJ. & WO.	DATE	LOCATION	DIM."A"	DIM."B"	DIM."C"	DIM."D"	DIM."E"	REMARKS
132-26-64245-3052	06-23-64	BLDG. B14, N. END	4'-10"	6'-0 1/2"	12'-2"	9"	12'-2"	VERIFY DIM. IN FIELD
124-44-64	11-23-64	BLDG.B56, S. END	4'-6"	7'-0"	7'-9"	6"	8'-0"	
111-70-66	11-30-64	BLDG. B55, W. SIDE	5'-8"	5'-9 5/8"	10'-0"	4'-3"	9'-4 1/4"	VERIFY DIM.
451-137-64	12-13-64	BLDG. B66, N. SIDE	5'-0"	5'-6"	14'-2"	7'-2"	14'-2"	
112-21-65,45-5779	01-26-65	BLDG. B55, W. SIDE	6'-0"	5'-6"	10'-6"	3'-6"	10'-6"	VERIFY DIM.
111-45-65,45-7619	10-21-65	BLDG. B55, E. SIDE	3'-6"	6'-0"	10'-10"	4'-0"	10'-10"	VERIFY DIM.
921-66-77	06-21-66	BLDG. B40, W. SIDE	3'-0"	3'-6"	8'-7 1/2"	6"	8-7 1/2"	VERIFY DIM.
(141-66-C7) 45-7824	09-07-66	BLDG. B55, N. SIDE	2'-6"	3'-1 3/4"	12'-0"	2'-6"	12'-0"	VERIFY DIM.
921-67-70	10-16-66	BLDG. B59, S. SIDE	SEE REMARKS	SEE REMARKS	8'-2"	SEE REMARKS	8'-2"	FIELD VERIFY ALL DIM.

REV	DATE	DESCRIPTION	DWN	CKD	APP
	6-15-01	UD MODS	EG	FL	

P.O.
PROJECT NO.

U.S. DEPARTMENT OF ENERGY

KIRTLAND AREA OFFICE — ALBUQUERQUE, NEW MEXICO

SANDIA NATIONAL LABORATORIES

HEAVY STEEL COOLER TOWER

P.O.
PROJECT NO.
DRAWN BY: MAJ
CHECKED BY: WC
SNL ENGR
DATE: 10/95

STRUCTURAL FRAMING — STANDARD

SIZE: D+ — DRAWING NO: SF1001STD — SEQ.

OLD FILE NAME: 078118/A01

MICROSTATION FILE

FILE NAME: SF1001STD.dgn

REFERENCE FILES: BORDER3.dgn

"Property of Sandia National Laboratories Facilities Management and Operation Center (FMOC). No duplication or alteration allowed without the expressed permission and authorization of FMOC."