OLD FILE NAME: 094175/A1

PREPARED BY:	SANDIA NATIONAL LABORATORIES FACILITIES ENGINEERING	DETAIL NO.: AE5025
CHECKED BY:		SCALE: NONE
DATE: 6-15-01 / REV: A	ANGLE SUPPORT FOR ROOF OPENING	ARCHITECTURAL STDROF.DGN

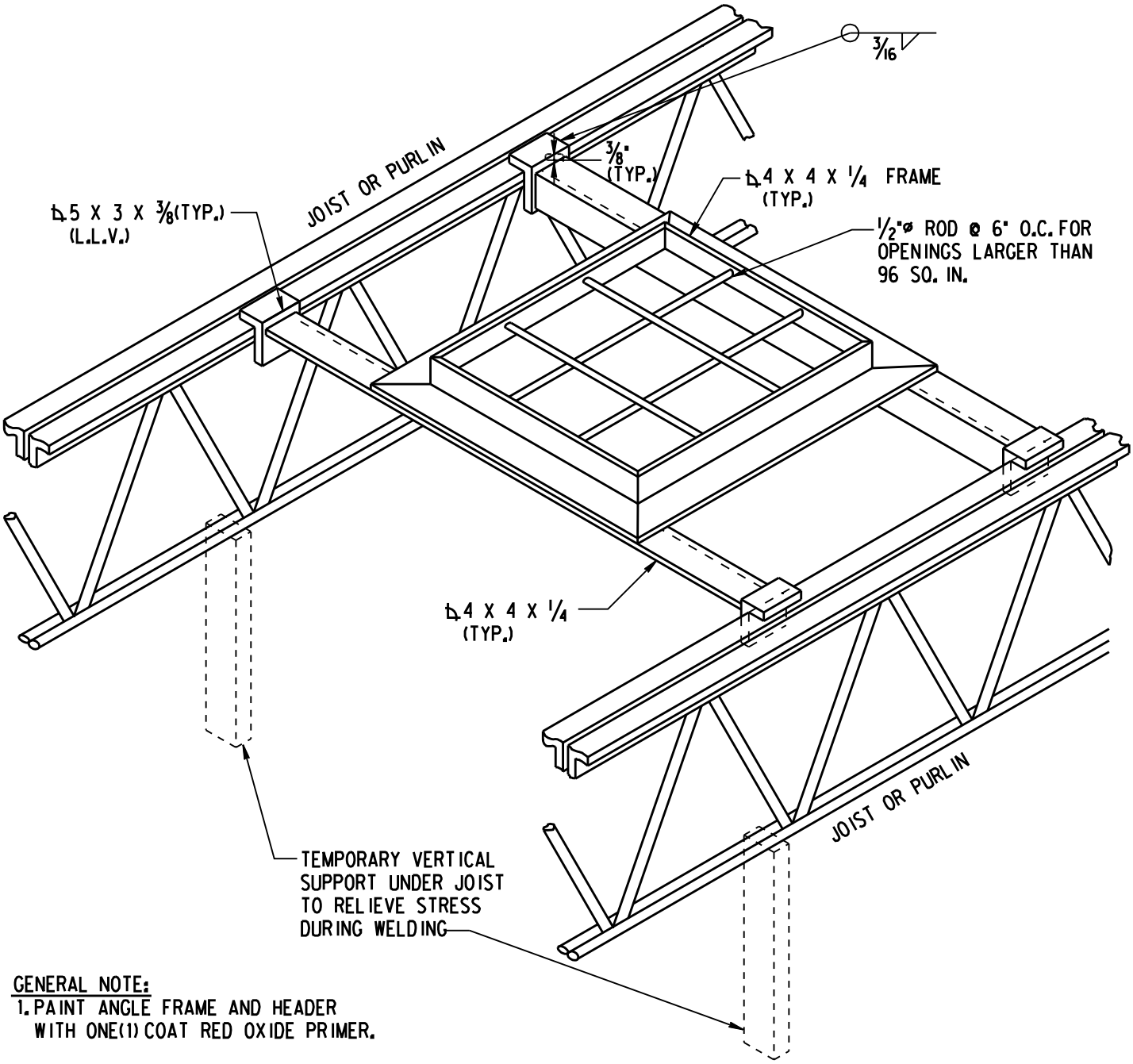

GENERAL NOTE:

1. PAINT ANGLE FRAME AND HEADER WITH ONE(1) COAT RED OXIDE PRIMER.

"Property of Sandia National Laboratories Facilities Management and Operation Center (FMOC).
No duplication or alteration allowed without the expressed permission and authorization of FMOC."