PREPARED BY:	SANDIA NATIONAL LABORATORIES FACILITIES ENGINEERING	DETAIL NO.: 15A-2
CHECKED BY:		SCALE: NONE
DATE: 6-15-01 / REV: B	TYPICAL EQUIPMENT LIST	MECHANICAL STANDARD

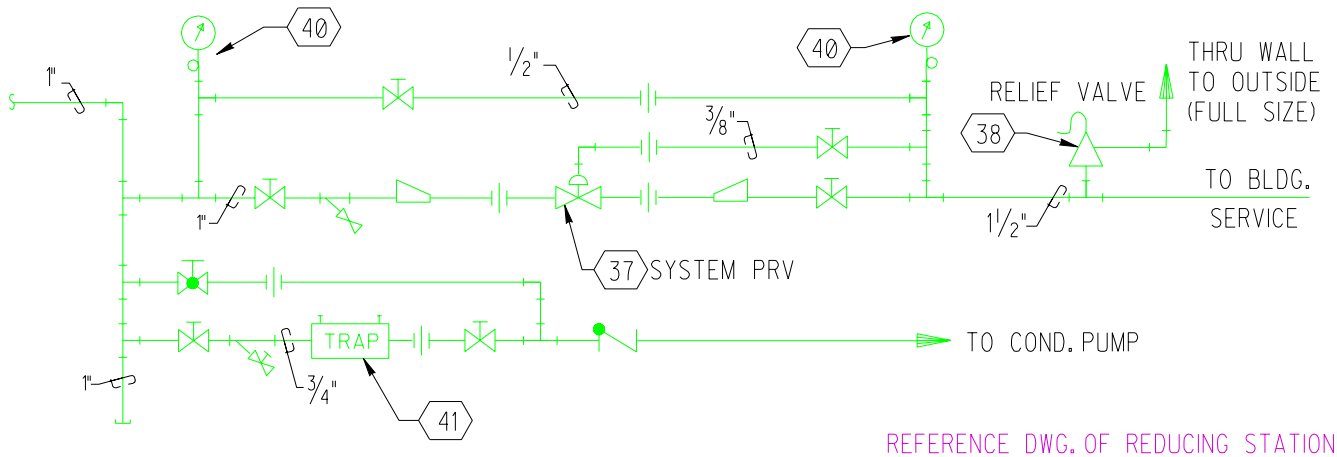

REFERENCE DWG. OF REDUCING STATION

MECHANICAL EQUIPMENT LIST

SYMBOL	DESCRIPTION
37	STEAM P.R.V.: SINGLE SEATED TO REDUCE 377#/HR. OF SATURATED 120 PSIG STEAM TO 10 PSIG, REPLACEABLE STELLITED SEAT, 5 TO 20 # SPRING, 1/2" SIZE, SCREWED, IRON BODY. LESLIE-TOPPER
38	STEAM PRESSURE RELIEF VALVE: SIZED TO HANDLE MAXIMUM UNREGULATED FLOW THRU THE P.R.V. FURNISHED. SEE THE SPECIFICATIONS FOR DETAILS. A.S.M.E. RATED, 20 PSIG SET PRESSURE. SPIRAX/SARCO NO.6000
39	NOT USED
40	PRESSURE GAGE: 3 1/2" DIA. DIAL, DRAWN STEEL CASE, COMPLETE WITH BRASS STOP COCK; RANGES 0-30, 0-60, 0-100, 0-160, 0-200 PSIG AS REQUIRED. MARSHALLTOWN MFG. CO. FIQURE 23
41	HIGH PRESSURE STEAM TRAP: 550#/HR OF CONDENSATE 15 DEG. BELOW STEAM TEMPERATURE WITH 1# DROP, EXTERNAL ADJUSTMENT OF TEMPERATURE CONTROLLER, SIGHT GLASS, BUILT-IN STRAINER AND BY-PASS, 3/4" SCREWED, VELAN TYPE 5-BY-2 WITH 1/2" ORIFICE. ABC CO. MODEL XYZ.
42	FLOAT VALVE: PILOT OPERATED, TWO POSITION, GLOBE PATTERN, 1/2" SCREWED, CLASS 125, TO DELIVER 10.7 G.P.M. AT 20 PSIDROP, COLD WATER SERVICE, TO MAINTAIN WATER LEVEL WITHIN 1". CLAYTON NO.124
	NOTE: THE MECHANICAL EQUIPMENT LIST AND PIPING DETAIL ARE SHOWN HERE ON THE SAME DRAWING FOR ILLUSTRATION PURPOSES ONLY. THE MECHANICAL EQUIPMENT LIST SHOULD BE ON A SEPARATE DRAWING IN A CONTRACT PACKAGE. DO NOT PLACE THE EQUIPMENT LIST ON PLAN, DETAIL, OR SCHEMATIC DRAWINGS.