OLD FILE NAME: 15J 47.DGN

| PREPARED BY: H&N | SANDIA NATIONAL LABORATORIES<br>FACILITIES ENGINEERING | SKETCH NO.: MP5051 |
|---|---|---|
| CHECKED BY: | | SCALE: NONE |
| DATE: 6-15-01 / REV: B | FLASH TANK OR RECEIVER | MECHANICAL STANDARD |

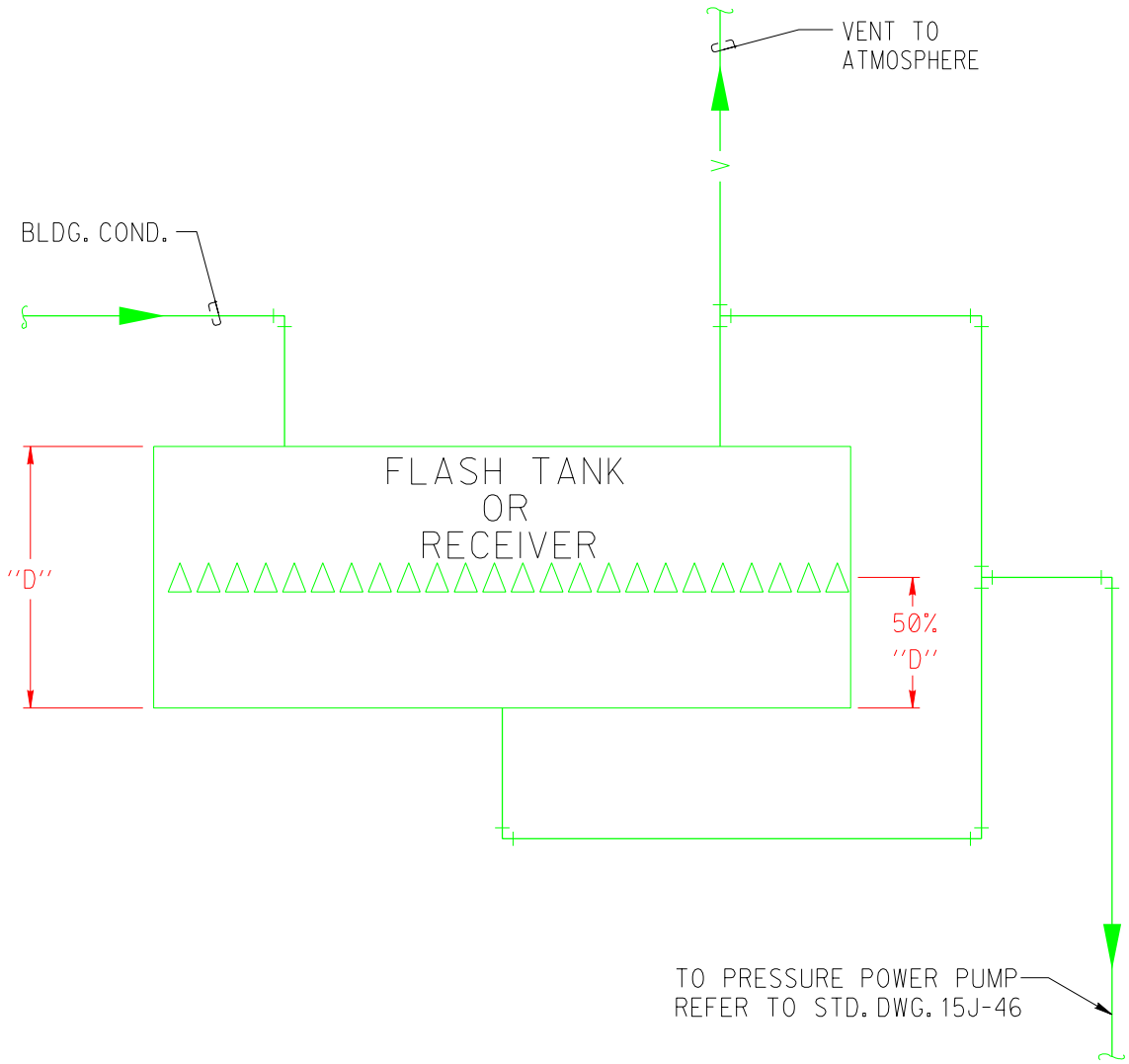


"Property of Sandia National Laboratories Facilities Management and Operation Center (FMOC).
No duplication or alteration allowed without the expressed permission and authorization of FMOC."