OLD FILE NAME: 15J 4.DGN

PREPARED BY:	SANDIA NATIONAL LABORATORIES FACILITIES ENGINEERING	DETAIL NO.: MP5050
CHECKED BY:		SCALE: NONE
DATE: 7-1-03 / REV: A	THERMOMETER MOUNTING	MECHANICAL STANDARD

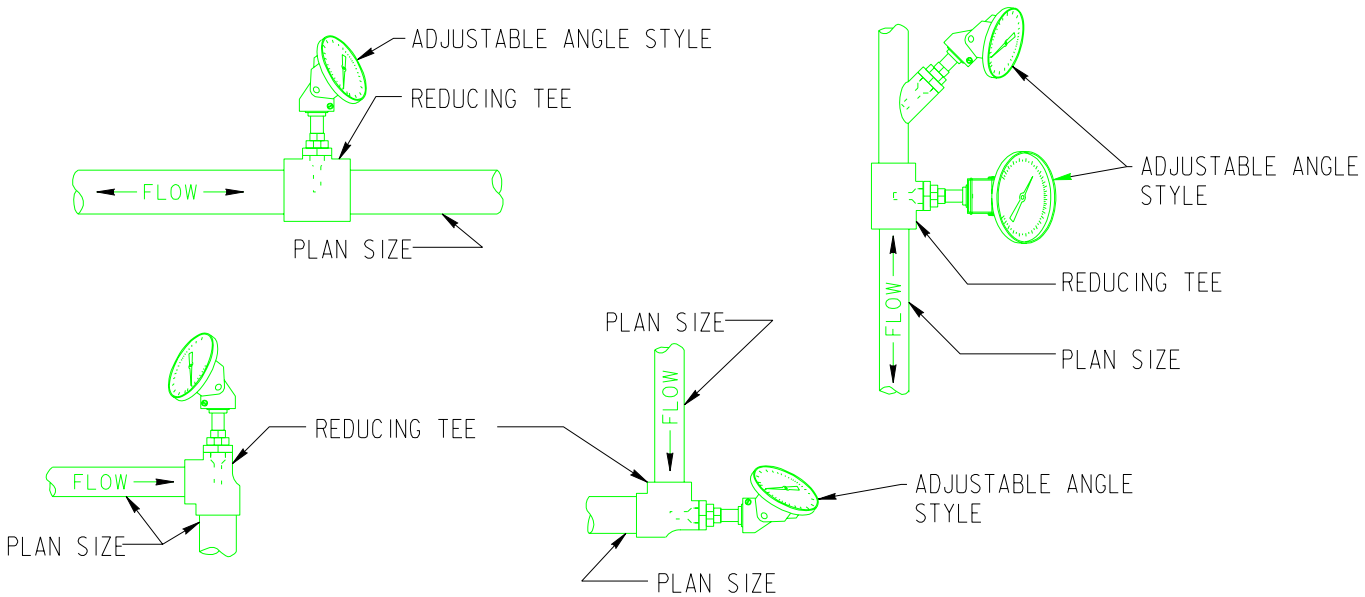

½" NIPPLE, THREADOLET OR ELBOWLET MAY BE USED IN LIEU OF TEE ON BLACK STEEL PIPING.

THERMOMETER INSTALLATION W/PIPING 1 ½" DIA. & LARGER

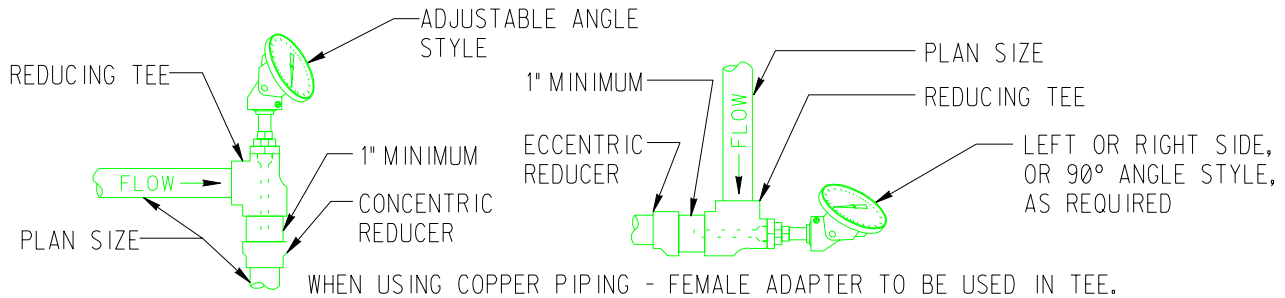

WHEN USING COPPER PIPING - FEMALE ADAPTER TO BE USED IN TEE.

THERMOMETER INSTALLATION W/PIPING 1 ½" DIA. & SMALLER

NOTES:

1. MINIMUM STEM LENGTH 3 ½". STEM LENGTH IN LARGER PIPING SHALL BE SUCH THAT STEM SHALL EXTEND INTO THE FLOW PATH.
2. EXTENSION NECK (LAGGING) SHALL BE USED ON ALL INSULATED PIPING.
3. TEST WELLS SHALL BE INSTALLED SIMILAR TO THERMOMETERS, EXCEPT THEY WILL BE INSTALLED VERTICALLY, OR AT A MINIMUM SLOPE OF 45° FROM VERTICAL IN ORDER THAT THEY MAY BE FILLED.
4. DIAL THERMOMETERS, REMOTE BULB THERMOMETERS & BULB TYPE TEMPERATURE CONTROLLERS SHALL BE INSTALLED IN THE SAME MANNER.
5. THERMOMETERS SHALL BE INSTALLED IN THERMOWELLS.

"Property of Sandia National Laboratories Facilities Management and Operation Center (FMOC). No duplication or alteration allowed without the expressed permission and authorization of FMOC."