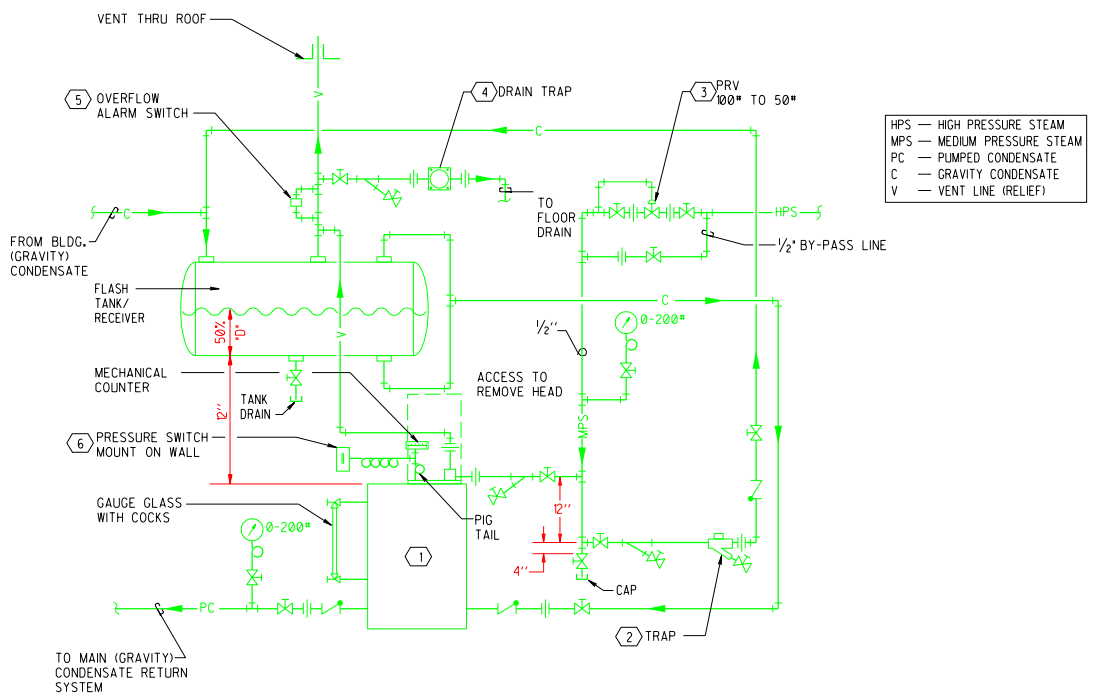

CONDENSATE PRESSURE POWERED PUMP

SCALE: N.T.S.

SYMBOL	DESCRIPTION
1	PRESSURE POWERED PUMP: PUMP SHALL HAVE GAUGE GLASS WITH COCKS AND MECHANICAL COUNTER. ___ LBS./HR. OPERATING WITH Ø0 PSI INLET PRESSURE AND 40 PSI BACK PRESSURE SPIRAX SARCO TYPE PPC, SIZE (AS REQUIRED).
2	STEAM TRAP: THERMODYNAMIC WITH BUILT-IN STRAINER. SPIRAX-SARCO MODEL ½" TD42, 225 LBS./HR. AT 60 PSI DIFFERENTIAL PRESSURE.
3	STEAM PRESSURE REDUCING VALVE: SPENCE TYPE "E", WITH "D" PILOT. 250 PSIG (MINIMUM) ASME BODY CONSTRUCTION. FURNISH FOR DEAD END SERVICE. Ø0 PSI ENTERING TO 50 PSI LEAVING. ½" SIZE 590 LBS./HR.
4	DRAIN TRAP: FLOAT TYPE, LESS AIR VENT, HORIZONTAL SCREWED PIPE CONNECTIONS. BODY AND COVER SHALL BE CAST STEEL, WITH STAINLESS STEEL TRIM. SPIRAX SARCO MODEL FT-Ø. SIZE TO BE SAME AS VENT PIPE.
5	OVERFLOW ALARM SWITCH: MAGNATROL MODEL B74-IB20 CA. CARBON STEEL FLOAT CAGE (ICONEL AND TYPE 316 S.S. TRIM) RATED AT 350° AND 930 PSI. 1 INCH NPT THREADED SERIES "C" SNAP SWITCH, SPDT, RATED AT 120 VDC, 0.40 AMPS, 450° F, MAX. LIQUID TEMPERATURE. ¾" NPT CONDUIT CONNECTION, NEMA 4 ENCLOSURE.
6	PRESSURE SWITCH: SQUARE D COMPANY, TYPE G INDUSTRIAL PRESSURE SWITCH, CLASS 9012, NEMA 1 MODEL GNG-5. INCLUDED WITH SWITCH SHALL BE A CLASS 9049 TYPE A7A STEAM CAPILLARY TUBING KIT FOR INSTALLATION BETWEEN THE PRESSURE AND PRESSURE SWITCH. SET POINT 75 PSI, DIFFERENTIAL 10 PSI.

P.O. PROJECT NO.	REV	DATE	DESCRIPTION	DWN	CKD	APP
		6-15-01	UDS MODS	EG	FL	
	A	1/96	STANDARD UPDATE	MAJ	RA	

U.S. DEPARTMENT OF ENERGY

KIRTLAND AREA OFFICE — ALBUQUERQUE, NEW MEXICO

SANDIA NATIONAL LABORATORIES

CONDENSATE PRESSURE POWERED PUMP	P.O.	
	PROJECT NO.	
	DRAWN BY	L.M.D.
	CHECKED BY	R.A.
	SNL ENGR	
MECHANICAL — STANDARD	DATE	1/96
	SIZE D+ — DRAWING NO MP5047STD	SEQ.

OLD FILE NAME: 15J 46.DGN

MICROSTATION FILE

FILE NAME: MP5047STD.dgn

REFERENCE FILES:

"Property of Sandia National Laboratories Facilities Management and Operation Center (FMOC). No duplication or alteration allowed without the expressed permission and authorization of FMOC."