OLD FILE NAME: 15J 3A.DGN

PREPARED BY: G.G.	SANDIA NATIONAL LABORATORIES FACILITIES ENGINEERING	DETAIL NO.: MP5043
CHECKED BY:		SCALE: NONE
DATE: 6-15-01 / REV: A	FIRE WALL PIPE PENETRATION	MECHANICAL STANDARD

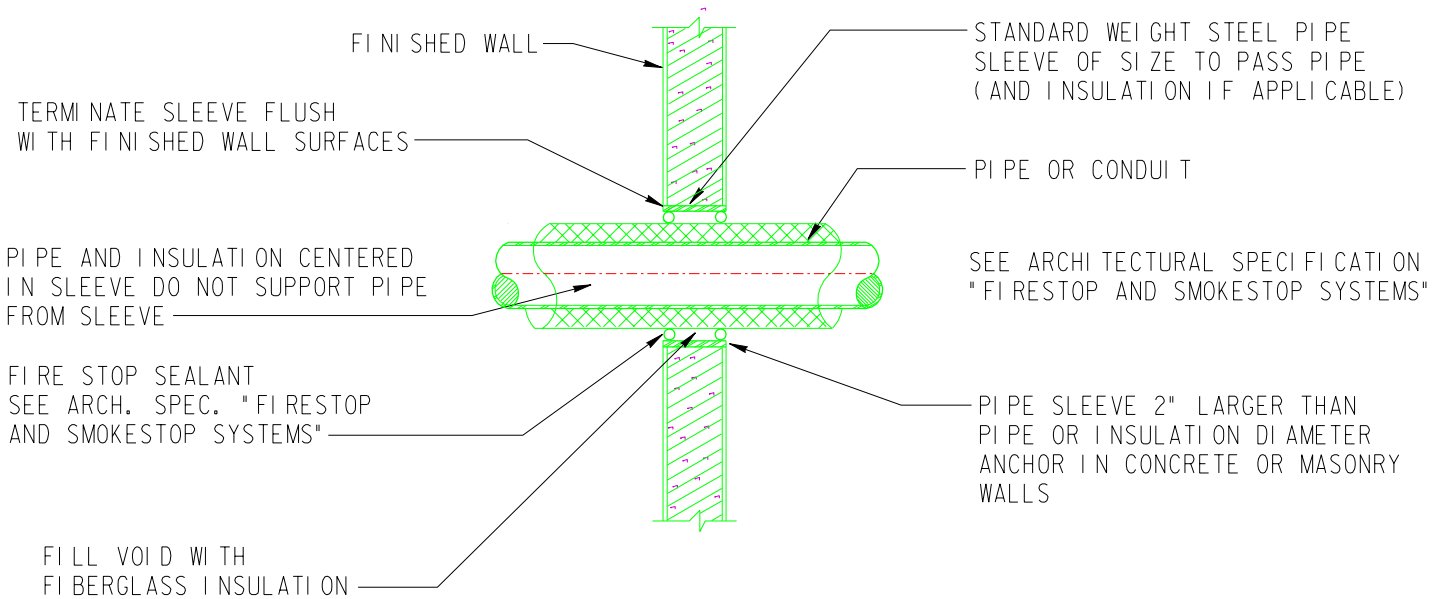

WALL PENETRATION

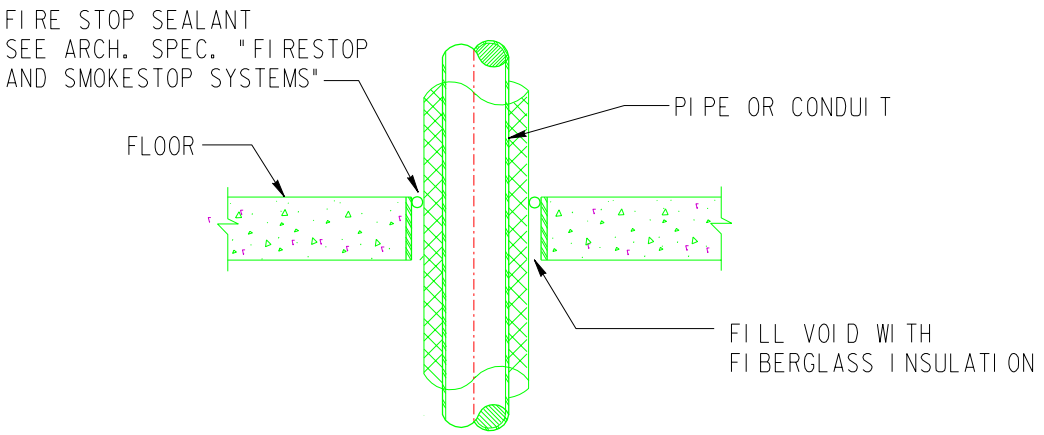

FLOOR PENETRATION

"Property of Sandia National Laboratories Facilities Management and Operation Center (FMOC). No duplication or alteration allowed without the expressed permission and authorization of FMOC."