OLD FILE NAME: 15J 17.DGN

PREPARED BY: E. L. GORE	SANDIA NATIONAL LABORATORIES FACILITIES ENGINEERING	DETAIL NO.: MP5013
CHECKED BY:		SCALE: NONE
DATE: 6-15-01 / REV:	BY-PASS FEEDER	MECHANICAL STANDARD

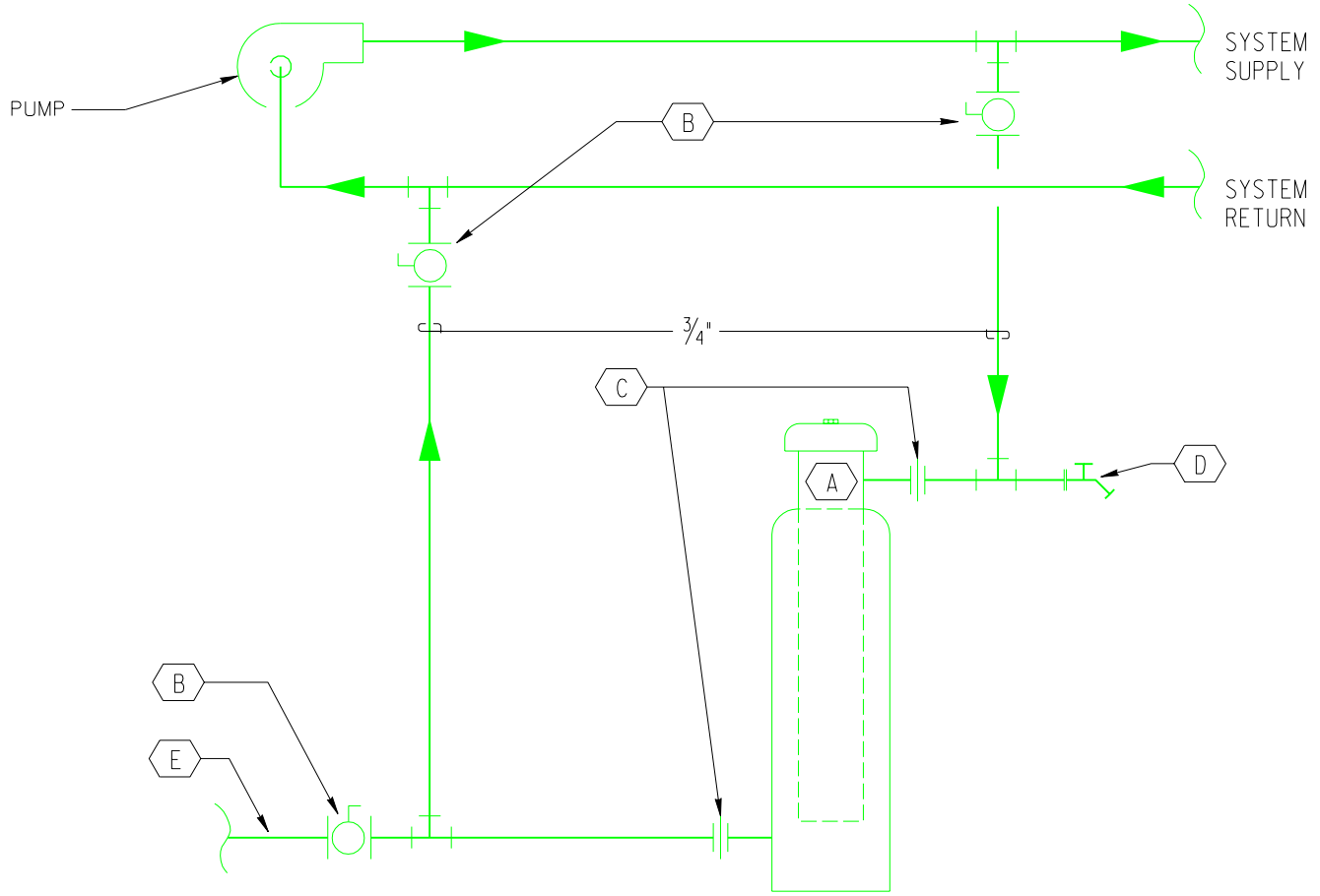

(A) FILTER / FEEDER: EFFICIENCY DYNAMICS INC. NO. FF-100, 5-GALLON, OPERATING PRESSURE UP TO 150 PSIG, OPERATING TEMPERATURE UP TO 200° F. MAXIMUM FLOW 40 GPM / PRESSURE DROP 3 PSI. STANDARD MODEL TO INCLUDE STAINLESS STEEL FILTER BAG SCREEN. REPLACEMENT FILTER IS A 5 MICRON POLYPROPYLENE BAG FILTER. SUPPORT AT FLOOR OR WALL AT A MAXIMUM HEIGHT OF 6' ABOVE FINISHED FLOOR. UPON COMPLETION OF SYSTEM PRESSURE TESTING AND FLUSHING, WATER TREAMENT CHEMICALS SHALL BE ADDED TO PROVIDE A CONCENTRATION AS DETERMINED BY AN SNL WATER TREATMENT CONSULTANT.

(B) BALL VALVE: FULL PORT BALL FOR ISOLATION AND REGULATING FLOW THROUGH THE FILTER/FEEDER.

(C) UNION: PROVIDE UNIONS AT UNIT FOR SERVICING. USE DIELECTRIC UNIONS WHEN CONNECTING WITH COPPER PIPE.

(D) HOSE BIBB: PROVIDE HOSE BIBB BETWEEN INLET ISOLATION VALVE AND FILTER / FEEDER FOR CHEMICAL SAMPLING.

(E) DRAIN LINE: ROUTE DRAIN LINE TO NEAREST FLOOR DRAIN.

"Property of Sandia National Laboratories Facilities Management and Operation Center (FMOC). No duplication or alteration allowed without the expressed permission and authorization of FMOC."