OLD FILE NAME: 15Q 26.DGN

PREPARED BY:	SANDIA NATIONAL LABORATORIES FACILITIES ENGINEERING	DETAIL NO.: MJ5003
CHECKED BY:		SCALE: NONE
DATE: 6-15-01 / REV: B	EXHAUSTER DETAIL	MECHANICAL STANDARD

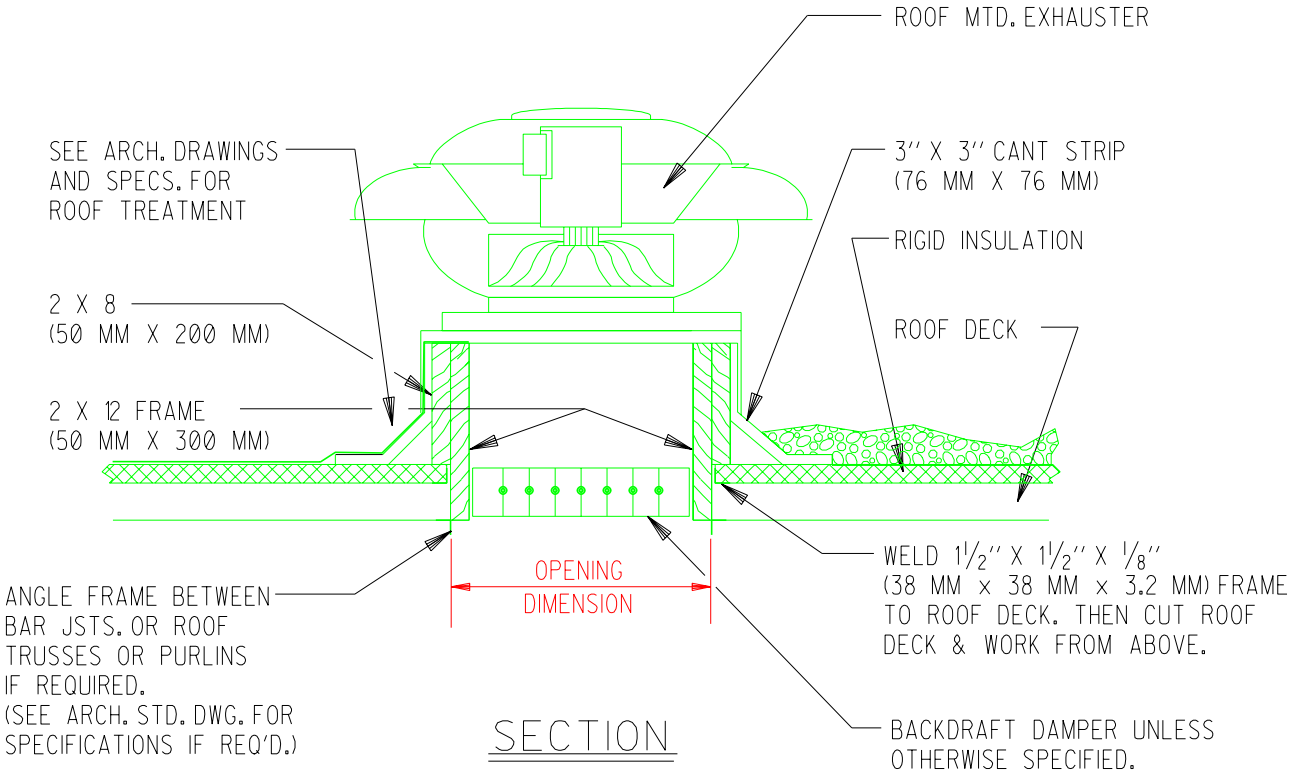

SECTION

NOTES:

1. PREFABRICATED ROOF CURB MAY BE USED IN LIEU OF FIELD BUILT CURB AT CONTRACTORS OPTION. SUBMITTAL DRAWING REQUIRED.

2. NOT TO BE USED WHERE GAS TEMPERATURES EXCEED 150° F., UNLESS CURBING IS CONSTRUCTED OF INCOMBUSTIBLE MATERIAL.

"Property of Sandia National Laboratories Facilities Management and Operation Center (FMOC). No duplication or alteration allowed without the expressed permission and authorization of FMOC."