OLD FILE NAME: 15J 44.DGN

PREPARED BY:	SANDIA NATIONAL LABORATORIES FACILITIES ENGINEERING	SKETCH NO.: MH5021
CHECKED BY:		SCALE: NONE
DATE: 6-15-01 / REV: C	FAN COIL UNIT	MECHANICAL STANDARD

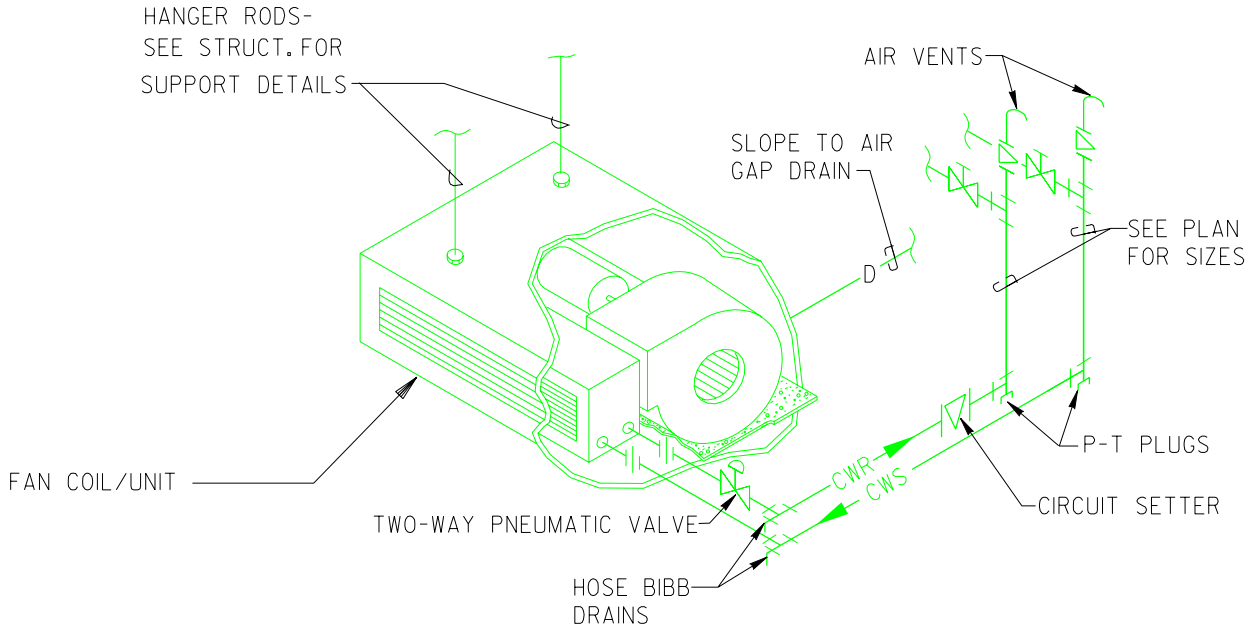

TYPICAL CONNECTION DETAIL

SCALE: NONE

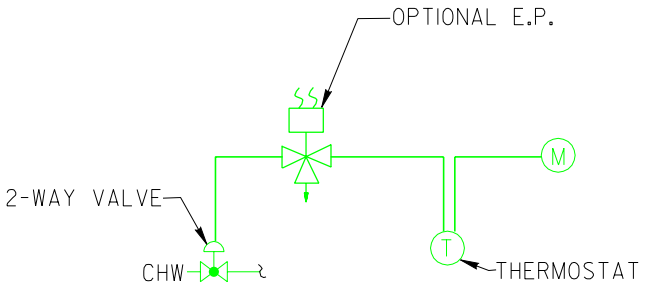

CONTROL

"Property of Sandia National Laboratories Facilities Management and Operation Center (FMOC).
No duplication or alteration allowed without the expressed permission and authorization of FMOC."