OLD FILE NAME: 15Q 12.DGN

PREPARED BY:	SANDIA NATIONAL LABORATORIES FACILITIES ENGINEERING	DETAIL NO.: MH5016
CHECKED BY:		SCALE: NONE
DATE: 6-15-01 / REV: C	DUCT OBSTRUCTIONS	MECHANICAL STANDARD

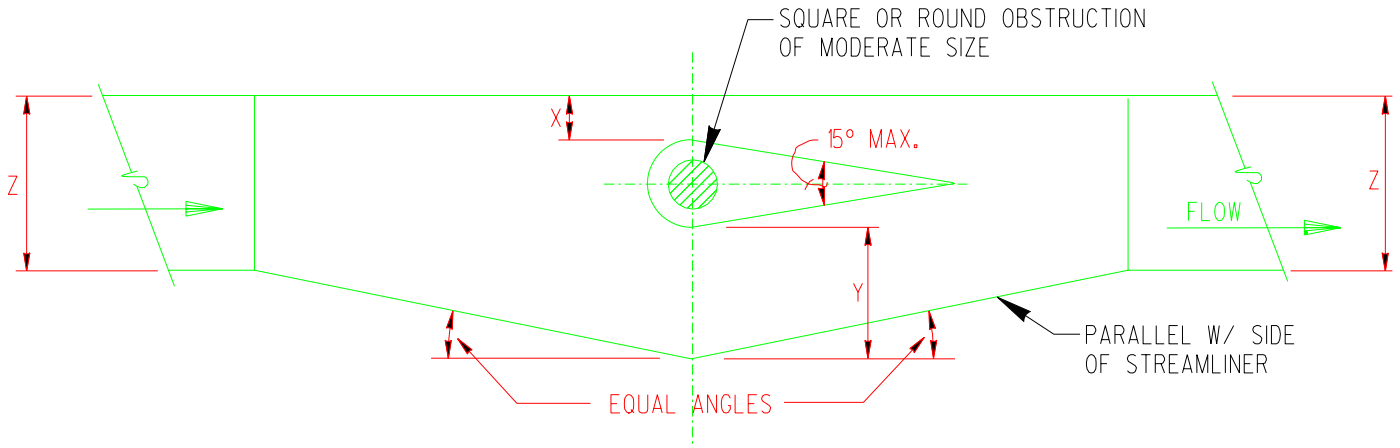

ASSUMING DUCT STAYS SAME HEIGHT
& THIS IS A PLAN VIEW, X & Y ARE TO BE
DETERMINED ON BASIS OF X+Y=Z

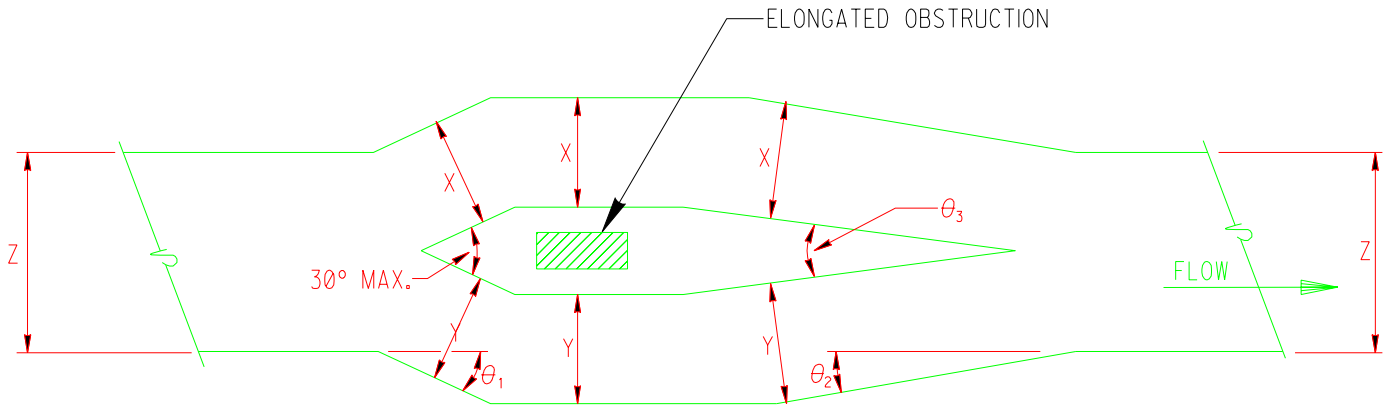

X + Y = 1.25 Z (MIN.)
AT CONSTANT DEPTH

θ_1 = 20° MAX.
θ_2 = 30° MAX.
θ_3 = 60° MAX.

"Property of Sandia National Laboratories Facilities Management and Operation Center (FMOC).
No duplication or alteration allowed without the expressed permission and authorization of FMOC."