OLD FILE NAME: 15Q 8.DGN

| PREPARED BY: | SANDIA NATIONAL LABORATORIES<br>FACILITIES ENGINEERING | DETAIL NO.: MH5015 |
|---|---|---|
| CHECKED BY: | | SCALE: NONE |
| DATE: 6-15-01 / REV: B | VERTICAL SPLITTER DAMPER | MECHANICAL STANDARD |

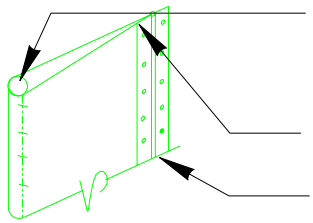


## DAMPER BLADE DETAIL

NO SCALE

A = 4" MINIMUM
B = 4" MINIMUM
(100 MM)

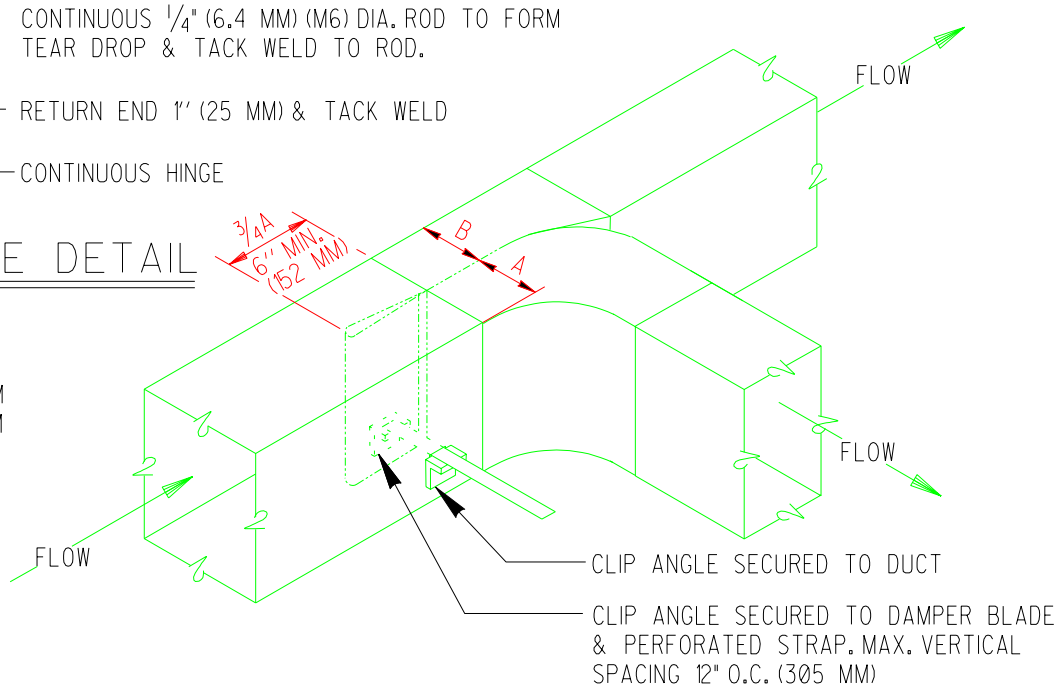


## INSTALLED IN CEILING WITH ACCESS

NO SCALE

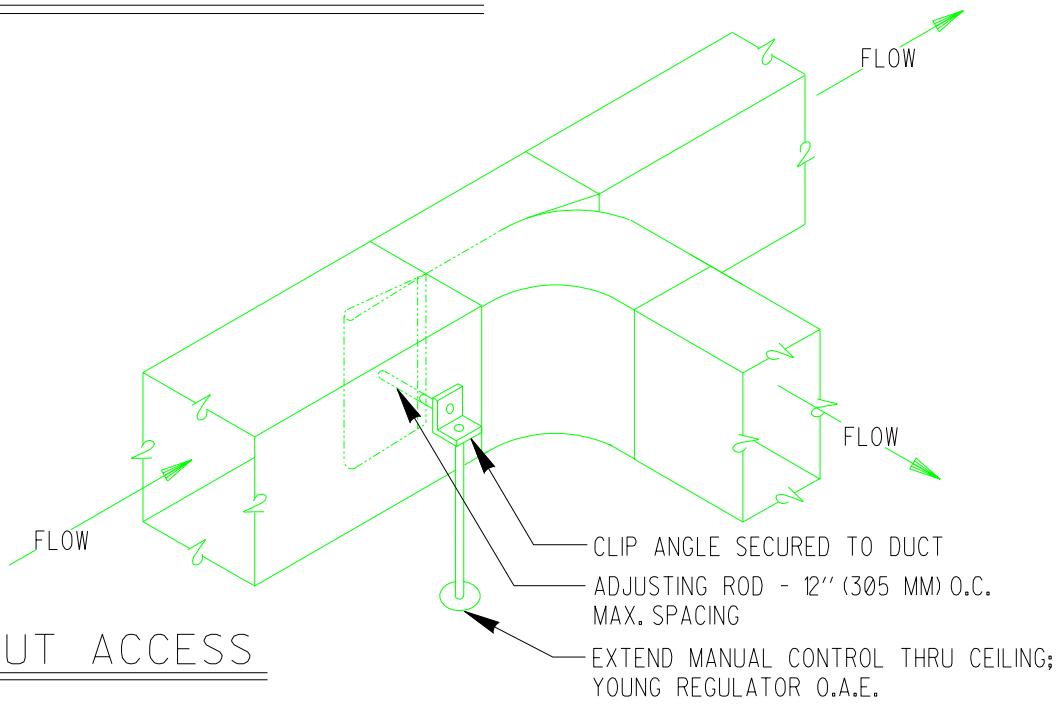


## INSTALLED IN CEILING WITHOUT ACCESS

NO SCALE

"Property of Sandia National Laboratories Facilities Management and Operation Center (FMOC).
No duplication or alteration allowed without the expressed permission and authorization of FMOC."