OLD FILE NAME: 15Q 4.DGN

PREPARED BY:	SANDIA NATIONAL LABORATORIES FACILITIES ENGINEERING	DETAIL NO.: MH5012
CHECKED BY:		SCALE: NONE
DATE: 6-15-01 / REV: B	DUCT HANGERS	MECHANICAL STANDARD

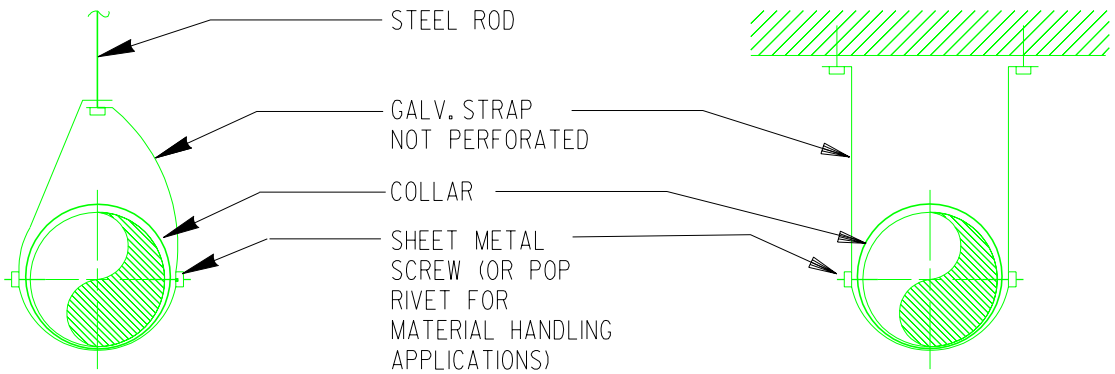

NOTE: SEE MECHANICAL STANDARD SPECIFICATION 15891- DUCTWORK FOR SUPPORT SIZING, MATERIALS, AND SPACING.

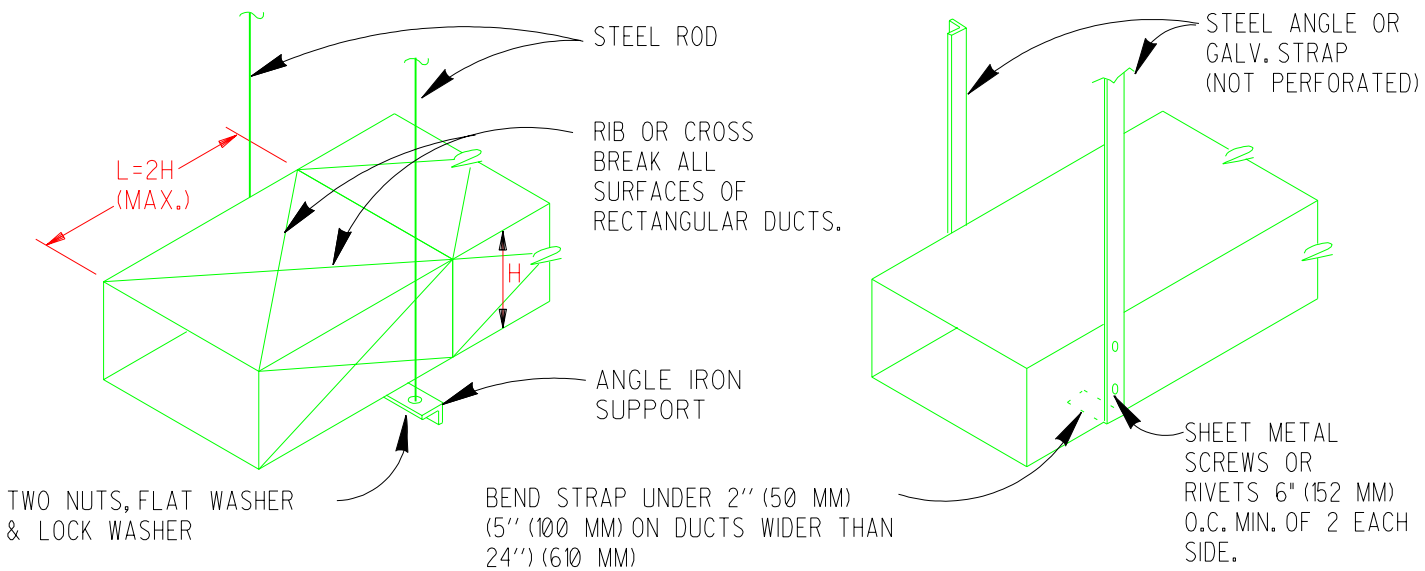

FOR CALIFORNIA FACILITIES: THIS IS COVERED BY "GUIDELINES FOR SEISMIC RESTRAINTS OF MECHANICAL SYSTEMS AND PLUMBING PIPING SYSTEMS." OFFICE OF THE STATE ARCHITECT STRUCTURAL SAFETY SECTION & SMACNA.

"Property of Sandia National Laboratories Facilities Management and Operation Center (FMOC). No duplication or alteration allowed without the expressed permission and authorization of FMOC."