OLD FILE NAME: 15Q 15.DGN

PREPARED BY:	SANDIA NATIONAL LABORATORIES FACILITIES ENGINEERING	DETAIL NO.: MH5010
CHECKED BY:		SCALE: NONE
DATE: 6-15-01 / REV: B	DUCT EXPANSION & CONTRACTION	MECHANICAL STANDARD

(A) NOTE: SURFACE ANGLE OF EXPANSION SHALL NOT EXCEED 15° FOR BOTH RECTANGULAR AND ROUND DUCTS.

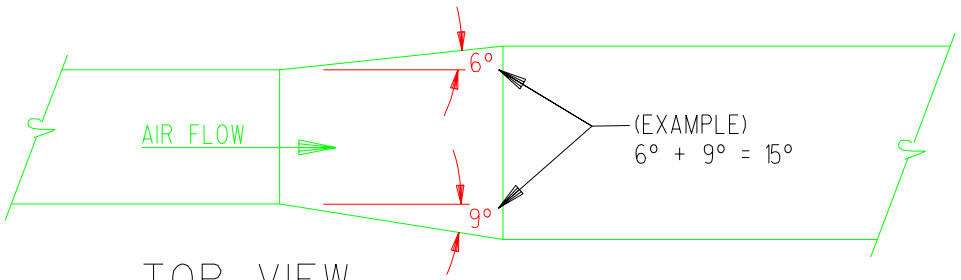

TOP VIEW

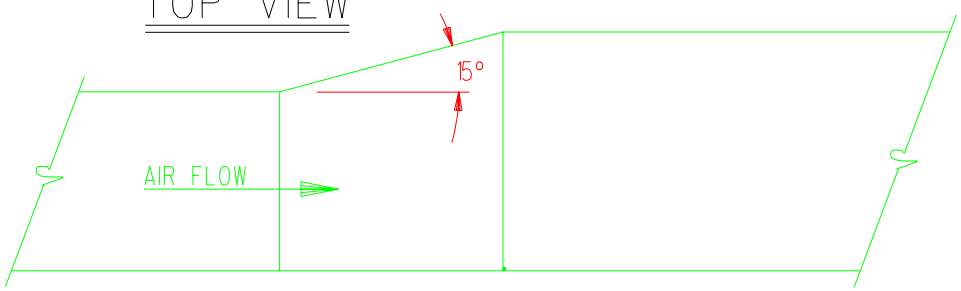

SIDE VIEW - RECTANGULAR

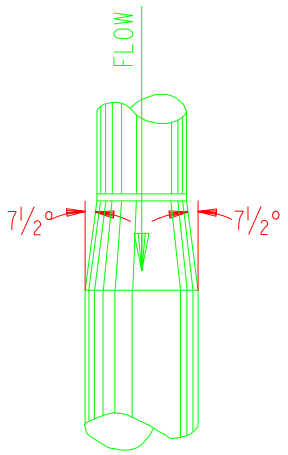

ROUND DUCT

(B) NOTE: SURFACE ANGLE OF CONTRACTION SHALL NOT EXCEED 30° FOR BOTH RECTANGULAR AND ROUND DUCTS.

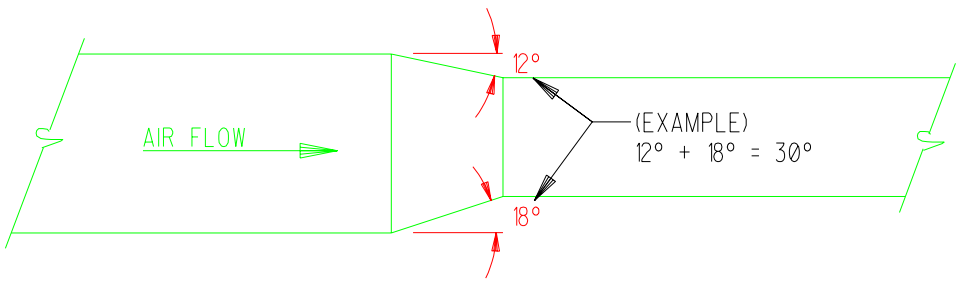

TOP VIEW

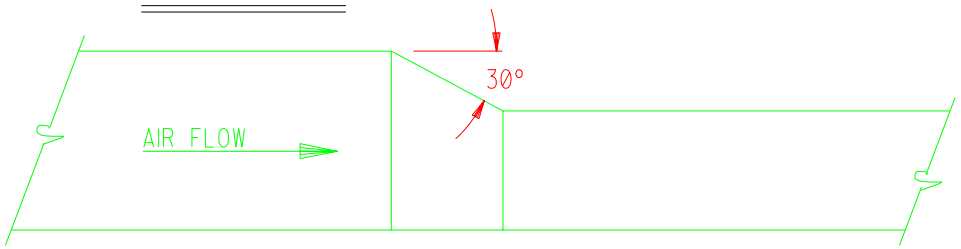

SIDE VIEW - RECTANGULAR

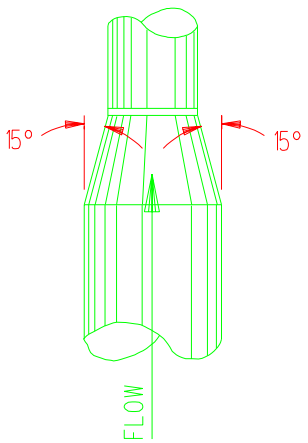

ROUND DUCT

"Property of Sandia National Laboratories Facilities Management and Operation Center (FMOC).
No duplication or alteration allowed without the expressed permission and authorization of FMOC."