OLD FILE NAME: 15Q 13.DGN

PREPARED BY:	SANDIA NATIONAL LABORATORIES FACILITIES ENGINEERING	DETAIL NO.: MH5009
CHECKED BY:		SCALE: NONE
DATE: 6-15-01 / REV: B	BRANCH DUCT TAKE-OFF DETAILS	MECHANICAL STANDARD

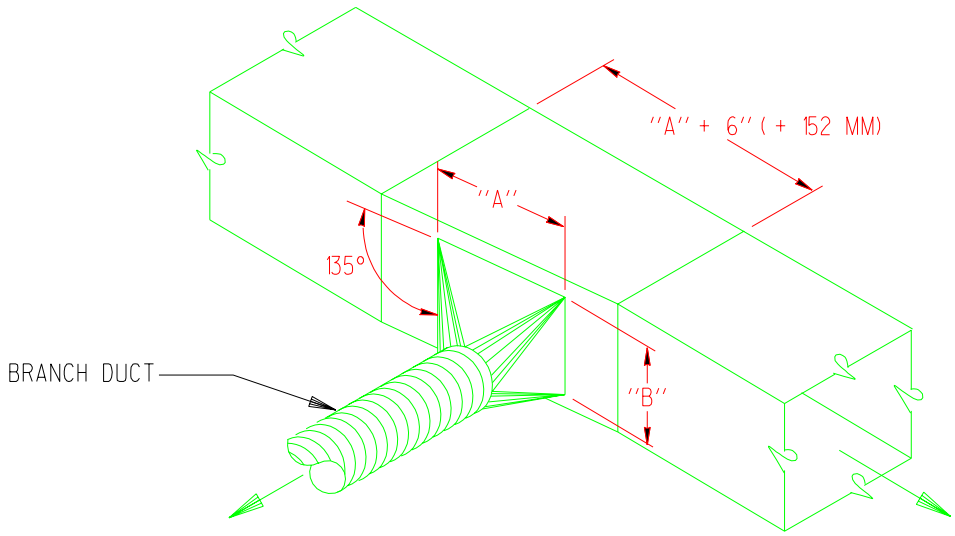

NOTE:
AREA OF "A" X "B" = 1.5 X
AREA OF BRANCH DUCT

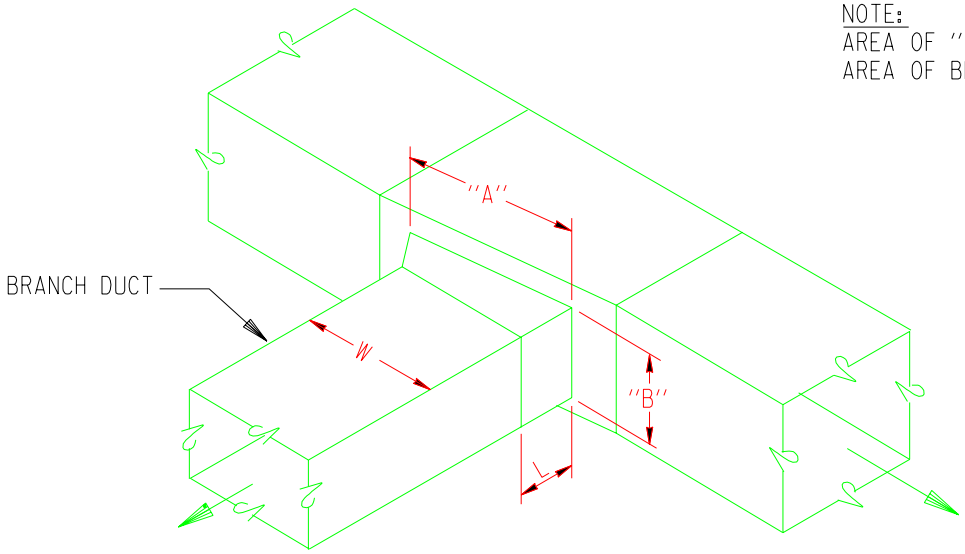

L = 1/4W
4" (100 MM) MINIMUM

"Property of Sandia National Laboratories Facilities Management and Operation Center (FMOC).
No duplication or alteration allowed without the expressed permission and authorization of FMOC."