OLD FILE NAME: 15Q 19.DGN

PREPARED BY:	SANDIA NATIONAL LABORATORIES FACILITIES ENGINEERING	DETAIL NO.: MH5007
CHECKED BY:		SCALE: NONE
DATE: 6-15-01 / REV: C	BOILER FLUE DETAIL	MECHANICAL STANDARD

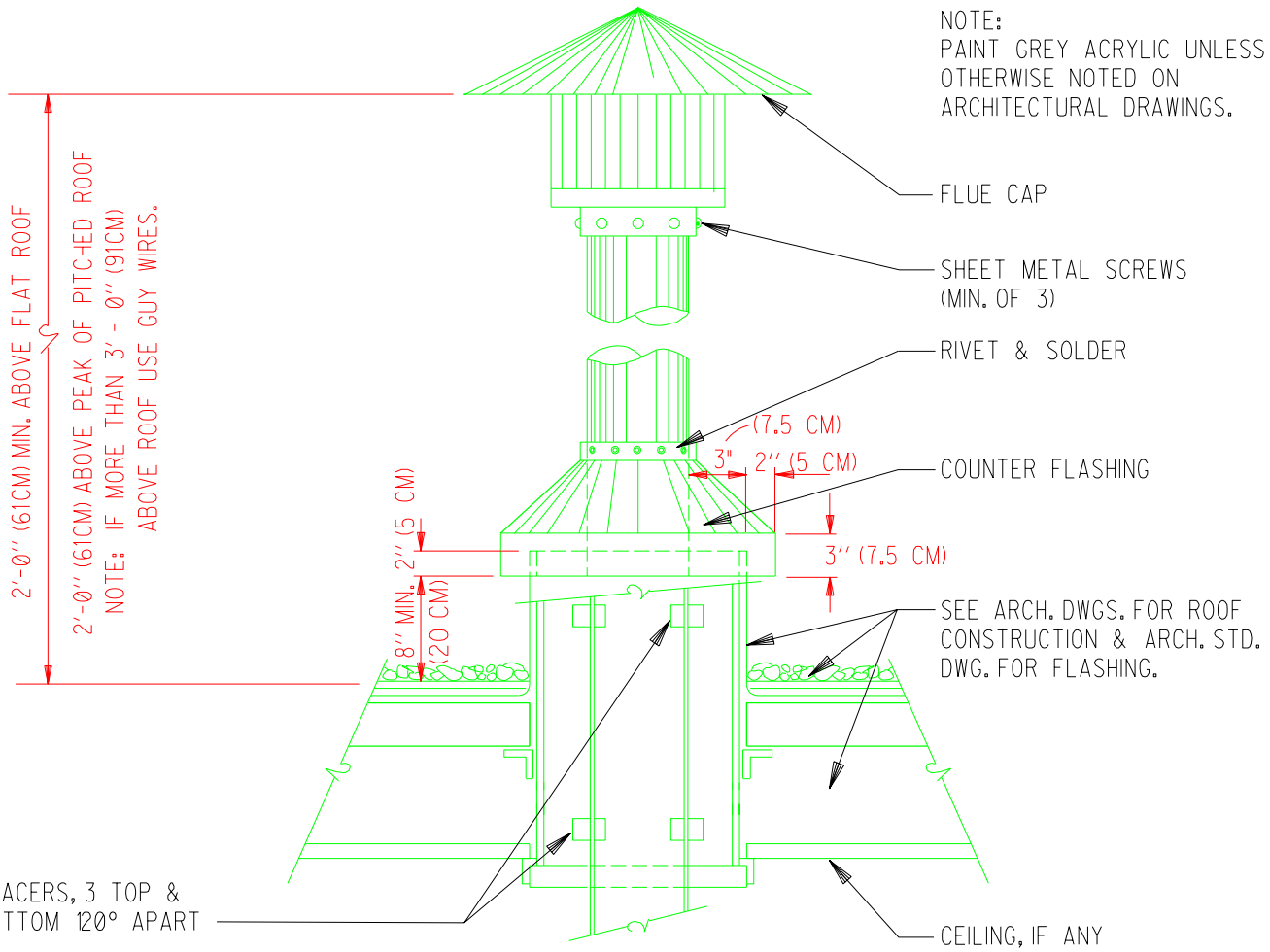

ELEVATION - SECTION

NOTE:
WEIGHT OF STACK TO BE SUPPORTED INDEPENDENTLY OF FLASHING, BOILER & FURNACE.

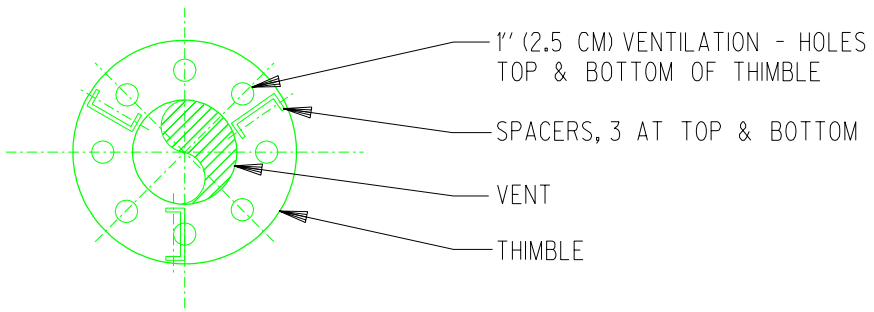

PLAN - SECTION THRU THIMBLE

"Property of Sandia National Laboratories Facilities Management and Operation Center (FMOC). No duplication or alteration allowed without the expressed permission and authorization of FMOC."