OLD FILE NAME: 15Q_22.DGN

PREPARED BY:	SANDIA NATIONAL LABORATORIES FACILITIES ENGINEERING	DETAIL NO.: MH5005
CHECKED BY:		SCALE: NONE
DATE: 6-15-01 / REV: C	VENTILATING FAN	MECHANICAL STANDARD

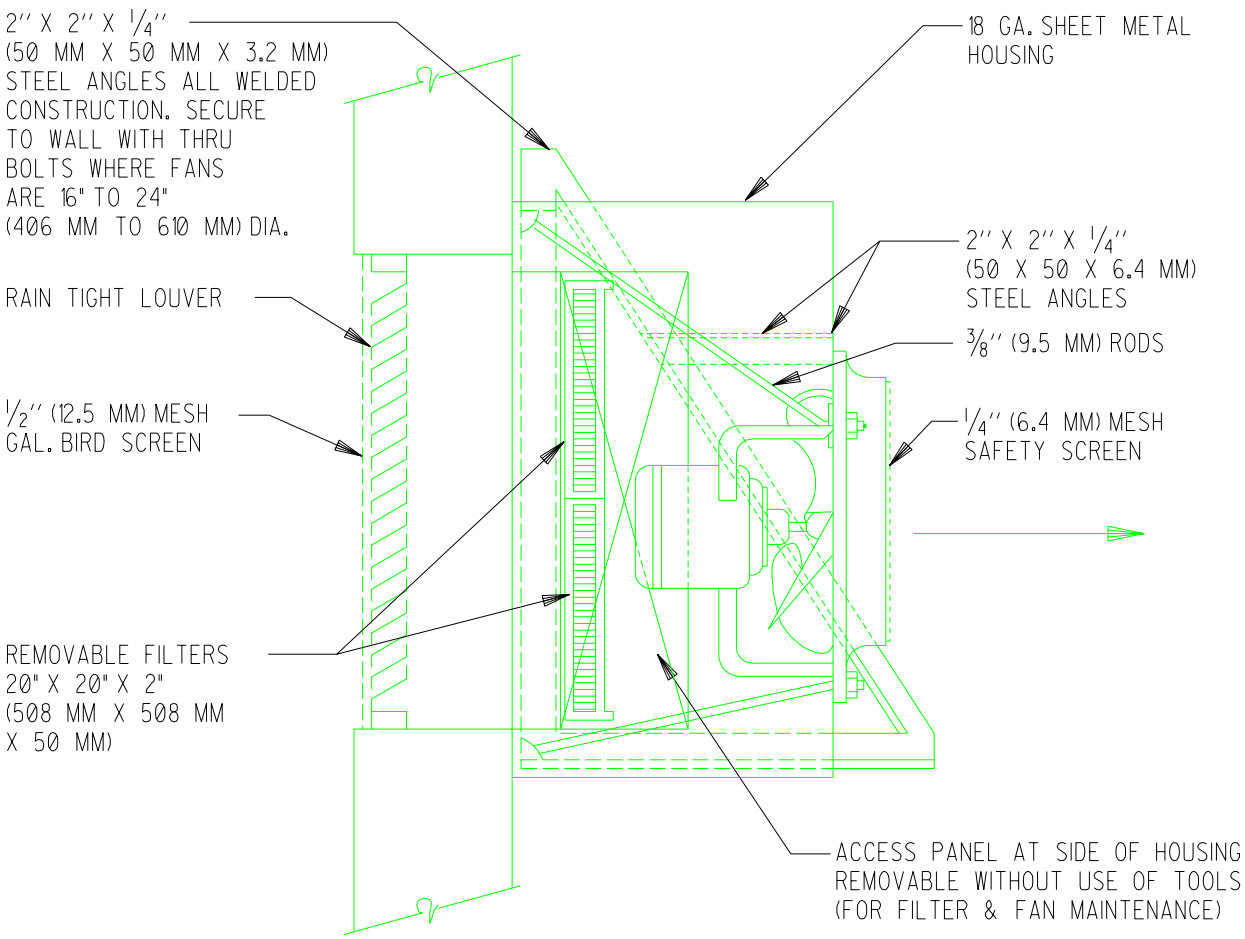

EQUIPMENT ROOM SUPPLY FAN DETAIL

NOTE:
MAY ALSO BE USED FOR EXHAUST BUT NEVER FOR COMBUSTION AIR REQUIREMENTS.

"Property of Sandia National Laboratories Facilities Management and Operation Center (FMOC).
No duplication or alteration allowed without the expressed permission and authorization of FMOC."