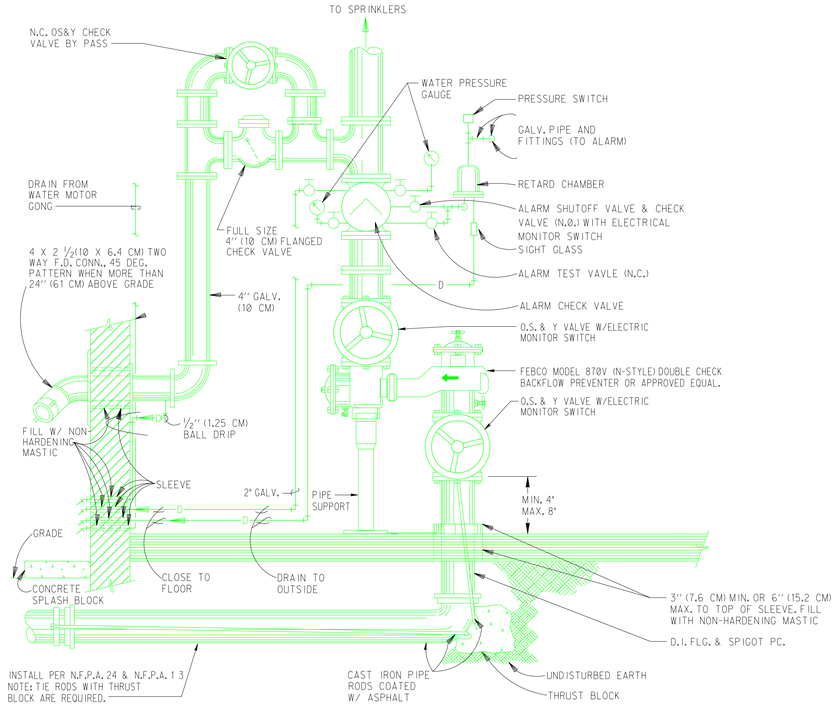

ALARM VALVE PIPING - WITH DCBFP (TYPICAL)

SCALE: NTS

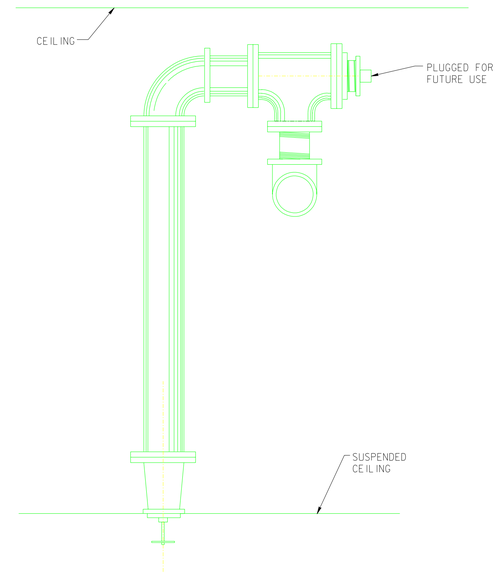

SPRINKLER DROP RETURN BEND (TYPICAL)

SCALE: NTS

GENERAL NOTES

1. THE DESIGN AND THE INSTALLATION OF THE SPRINKLER SYSTEM SHALL CONFORM TO ALL APPLICABLE PROVISIONS OF NFPA 13, LATEST EDITION, SANDIA SPECIFICATION 15310, EXCEPT AS MODIFIED BY "FIRE PROTECTION NOTES" THIS SHEET AND DRAWINGS.

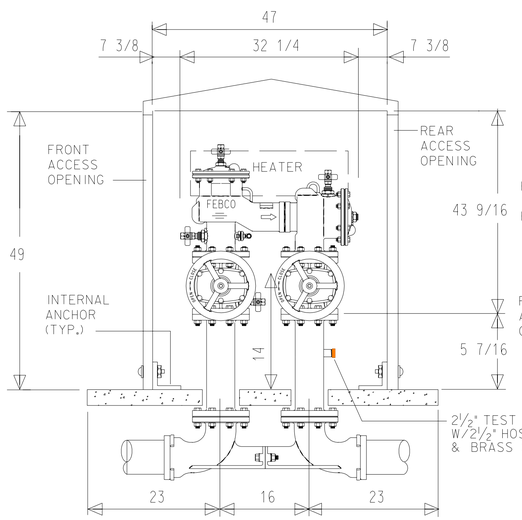

SIDE VIEW

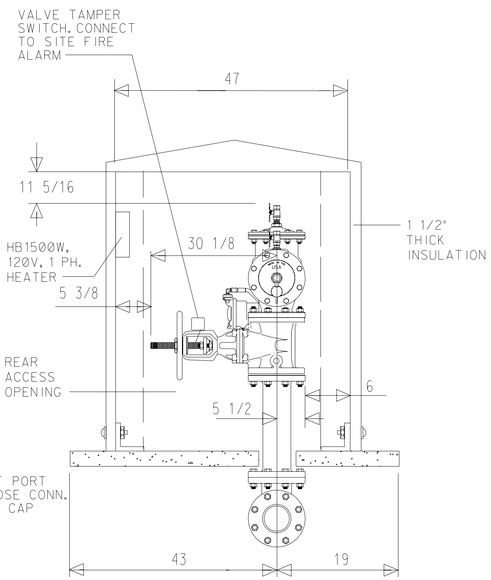

BACK VIEW

(12" CLR.)

NOTES :

1. ALL DIMENSIONS ARE APPROXIMATED IN INCHES.
2. RECOMMENDED SLAB SIZE : 62"L x 62"W x 4" MINIMUM THICKNESS.
3. UNIT IS HOT BOX #HB6FEM, OR APPROVED EQUAL.

REV	DATE	DESCRIPTION	DWN	CKD	APP
1	9-1-03	MODS	ELG	PA	

P.O.
PROJECT NO.

U.S. DEPARTMENT OF ENERGY
KIRTLAND AREA OFFICE — ALBUQUERQUE, NEW MEXICO

SANDIA NATIONAL LABORATORIES

ALARM VALVE PIPING DETAILS

P.O.
PROJECT NO.
DRAWN BY: E. L. GORE
CHECKED BY: M. TURGEON
SNL ENGR
DATE: 5-1-02

FIRE PROTECTION — STANDARD

SIZE: D+ DRAWING NO: FX5004STD SEQ.

MICROSTATION FILE
FILE NAME: FX5004STD.DGN
REFERENCE FILES: BORDER3.DGN

"Property of Sandia National Laboratories Facilities Management and Operation Center (FMOC). No duplication or alteration allowed without the expressed permission and authorization of FMOC."