GENERAL NOTES

1. THIS SHEET SHOWS TYPICAL HANGING METHODS. SPECIAL CONDITIONS WILL REQUIRE ADDITIONAL SHOP DRAWINGS.
2. HANGERS MUST BE U.L. OR F.M. APPROVED FOR PIPE SIZES USED.
3. ALL HANGING ARRANGEMENTS MUST BE IN ACCORDANCE WITH NFPA NO. 13 EXCEPT FOR INSTALLATION AND HANGING METHODS CERTIFIED BY A REGISTERED PROFESSIONAL ENGINEER IN ACCORDANCE WITH NFPA 13.
4. INDICATED MANUFACTURER OR APPROVED EQUAL WILL BE ACCEPTABLE.

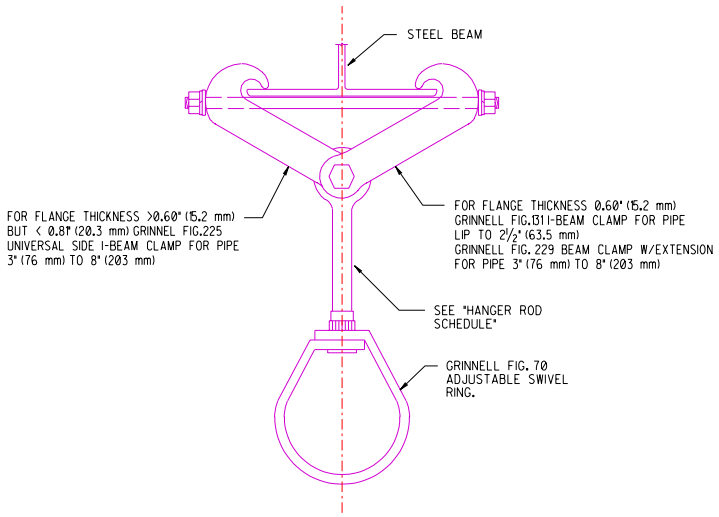

TYPICAL HANGER DETAIL A

NOT TO SCALE

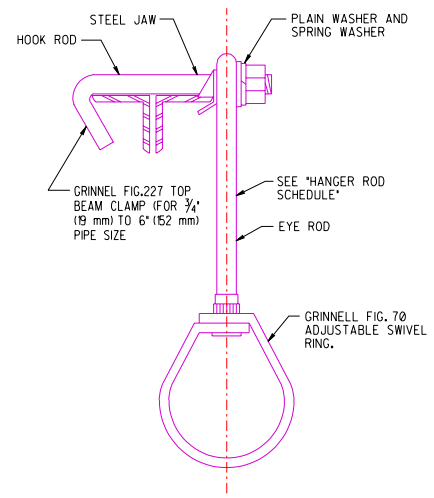

TYPICAL HANGER DETAIL B

NOT TO SCALE

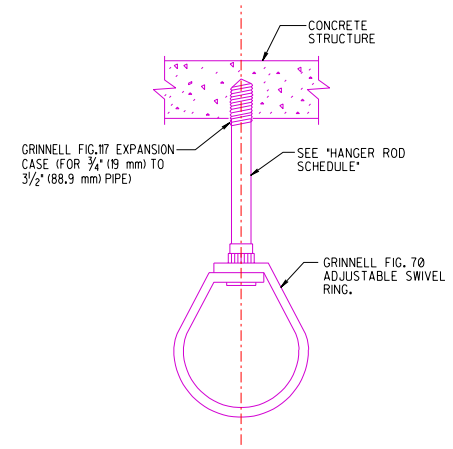

TYPICAL HANGER DETAIL C

NOT TO SCALE

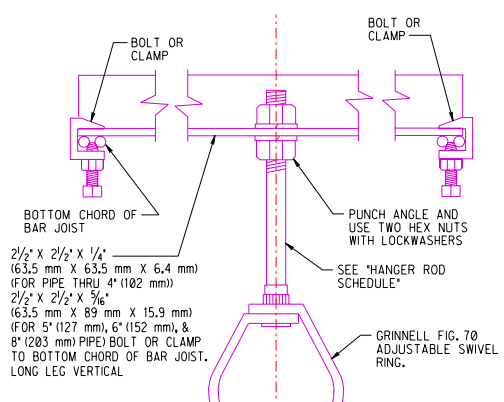

TYPICAL HANGER DETAIL D

NOT TO SCALE

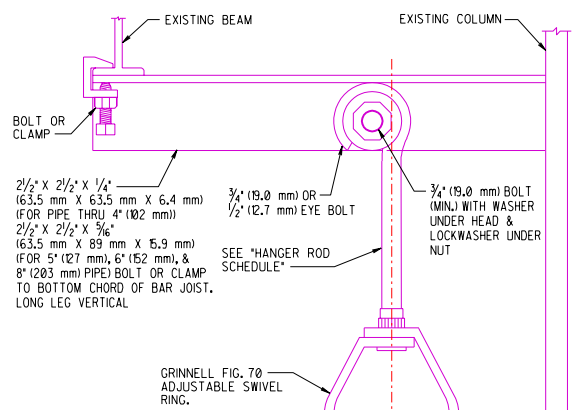

TYPICAL HANGER DETAIL E

NOT TO SCALE

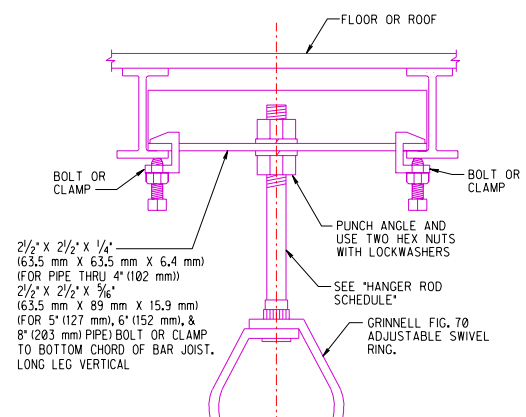

TYPICAL HANGER DETAIL F

NOT TO SCALE

HANGER ROD SCHEDULE: MINIMUM

STRAIGHT RODS	
(PIPE SIZE)	(DIAM. OF ROD)
UP TO 4" (102 mm)	3/8" (9.53 mm)
5" (127mm), 6" (152 mm) & 8" (203 mm)	1/2" (12.70 mm)
10" (254 mm) & 12" (305 mm)	5/8" (15.87 mm)
"U" HOOKS	
UP TO 2" (51mm)	5/16" 7.94 mm)
2½" (64 mm) TO 6" (152 mm)	3/8" (9.53 mm)
8" (203 mm)	1/2" (12.70 mm)
EYE RODS (WITH BENT EYE)	
UP TO 4" (102 mm)	3/8" (9.53 mm)
5" (127 mm) - 6" (152 mm)	1/2" (12.70 mm)
8" (203 mm)	3/4" (19.05 mm)

P.O. PROJECT NO.	REV	DATE	DESCRIPTION	DWN	CKD	APP
	1	6-15-01	UDS MODS	EG	FL	
	0	1/00	REVISE	YMA	DW	

U.S. DEPARTMENT OF ENERGY

KIRTLAND AREA OFFICE — ALBUQUERQUE, NEW MEXICO

SANDIA NATIONAL LABORATORIES

FIRE PROTECTION PIPE HANGER

P.O.
PROJECT NO.
DRAWN BY: G.C.
CHECKED BY
SNL ENGR
DATE: 1/20/93

FIRE PROTECTION — STANDARD

SIZE: D+ — DRAWING NO: FX5002STD — SEQ.

OLD FILE NAME: 151_4.dgn

MICROSTATION FILE

FILE NAME: FX5002STD.dgn

REFERENCE FILES:

Property of Sandia National Laboratories Facilities Management and Operation Center (FMOC). No duplication or alteration allowed without the expressed permission and authorization of FMOC.