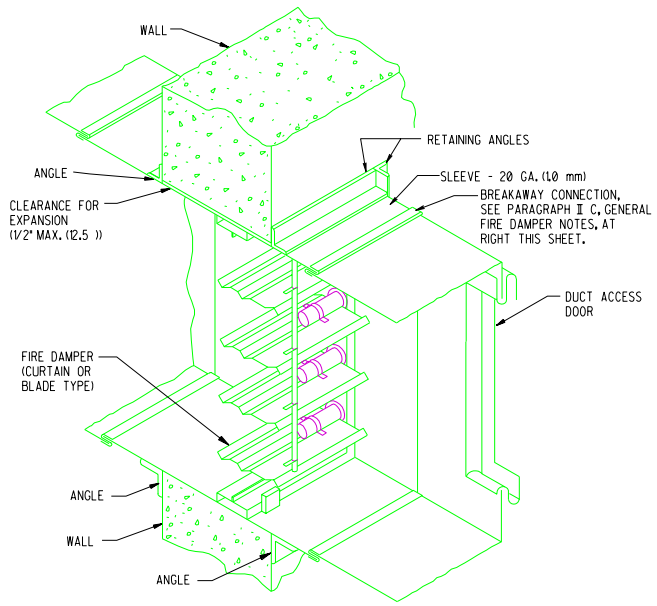

FIRE DAMPER IS SHOWN IN VERTICAL POSITION IN WALL; HORIZONTAL INSTALLATION IS SIMILAR.

A FIRE AND SMOKE DAMPER

SCALE: N.T.S.

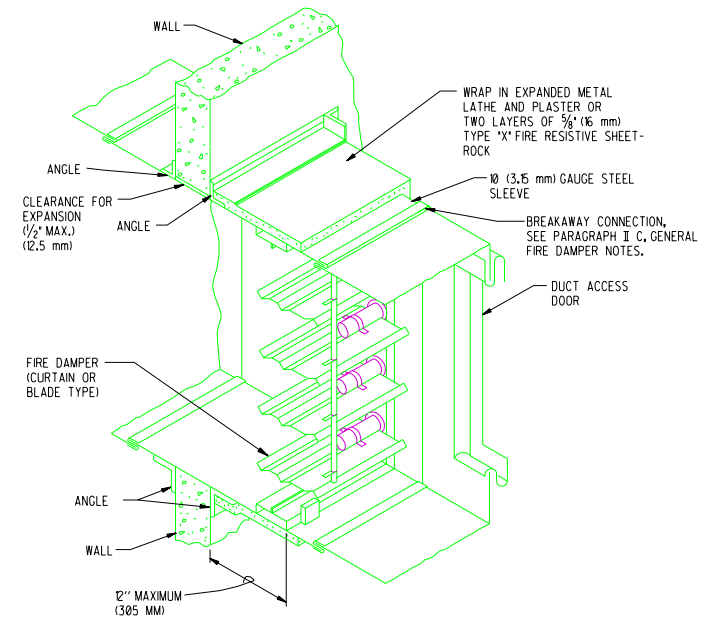

CAUTION:
THIS ARRANGEMENT MAY BE USED ONLY WHEN PHYSICAL OBSTRUCTIONS PRECLUDE USE OF METHOD SHOWN IN DETAIL A AND ONLY AFTER APPROVAL OF SANDIA FIRE PROTECTION ENGINEERING.

B FIRE AND SMOKE DAMPER

SCALE: N.T.S.

I. INSTALLATION

A. UL APPROVED FIRE DAMPERS SHALL BE INSTALLED VERTICALLY IN WALLS AND PARTITIONS OR HORIZONTALLY IN FLOORS AS SHOWN, AND IN CONFORMANCE WITH NFPA STANDARD 90A.

1. FIRE DAMPERS SHALL BE INSTALLED TO BECOME AN INTEGRAL PART OF THE WALL, PARTITION, OR FLOOR. DAMPERS SHALL NOT BE INSTALLED AS PART OF THE DUCT. SEE DETAIL A. EXCEPTION: WHERE PHYSICAL OBSTRUCTIONS PRECLUDE INSTALLATION WITHIN WALL, PARTITION, OR FLOOR, THE DAMPER MAY BE INSTALLED IN A 10 GAUGE (2.80 MM) SLEEVE A MAXIMUM OF 12 INCHES (305 MM) FROM THE BARRIER SURFACE PROVIDED THE EXTERIOR OF THE SLEEVE IS COATED WITH AN APPROVED FIRE RESISTIVE MATERIAL EQUAL TO THE FIRE RATING OF THE BARRIER. SEE DETAIL B. ALL OTHER REQUIREMENTS APPLY.

2. WHERE THIS DRAWING AND THE MANUFACTURER'S INSTALLATION INSTRUCTIONS CONFLICT, UL OR FM "APPROVED" INSTALLATION INSTRUCTIONS GOVERN.

3. THE DAMPER SHALL BE INSTALLED IN THE PLANE OF THE OPENING BY MEANS OF RETAINING ANGLES SECURED TO THE SLEEVE.

4. SECURE DAMPERS TO SLEEVES IN ACCORDANCE WITH THE FIRE DAMPER MANUFACTURER'S INSTRUCTIONS. MINIMUM FASTENINGS SHALL BE ON 8" (200 MM) CENTERS WITH

A. 1/2" (12.5 MM) LONG WELDS, OR

B. 1/4" (6.4 MM) (M6) BOLTS AND NUTS IN HOLES PROVIDED, OR

C. NO. 10 (M4) STEEL SCREWS, OR

D. MINIMUM 3/16" (4.76 MM) (M4) STEEL RIVETS.

THERE SHALL BE A MINIMUM OF 2 FASTENINGS PER SIDE BEGINNING 2 INCHES (50 MM) FROM THE CORNER OF THE FIRE DAMPER SLEEVE.

5. OBSERVE AIR FLOW DIRECTION SPECIFIED BY FIRE DAMPER MANUFACTURER. INSTALL FIRE DAMPERS SO THAT THEY CLOSE IN THE DIRECTION OF THE AIR FLOW.

6. MAKE SURE DAMPERS ARE INSTALLED TRUE, SQUARE, AND LEVEL.

B. THE FIRE DAMPER SLEEVE SHOULD NOT REST ON COMBUSTIBLE MATERIAL. OPENINGS IN WOOD FRAME OR STEEL STUD WALL CONSTRUCTION REQUIRE THAT THE WALL SURFACE MATERIAL BE USED TO LINE THE OPENING SURROUNDING THE FIRE DAMPER SLEEVE.

II. SLEEVES

A. SLEEVES (COLLARS) SHALL BE A MINIMUM OF 20 GA (1.00 MM) GAUGE STEEL, BUT IN NO CASE LESS THAN THE GAUGE OF THE CONNECTING DUCTWORK.

B. SECURE DUCT TO SLEEVE USING UL APPROVED BREAKAWAY CONNECTIONS PER SMACNA FIRE, SMOKE, AND RADIATION DAMPER INSTALLATION GUIDE FOR HVAC SYSTEMS.

C. CLEARANCE FOR THERMAL EXPANSION IS REQUIRED BETWEEN THE SLEEVE AND THE PROTECTED OPENING IN AN AMOUNT EQUAL TO 1/8 INCH PER LINEAL FOOT (10.4 MM/M) OF SLEEVE DIMENSION, WITH A MAXIMUM CLEARANCE OF 1/2 INCH (12.5 MM). FOR VERTICAL INSTALLATION, THE BOTTOM OF THE SLEEVE RESTS ON THE BOTTOM OF THE WALL OPENING; THEREFORE ALL VERTICAL CLEARANCE IS AT THE TOP. CLEARANCE ON THE SIDES IS EQUALLY DISTRIBUTED ON EACH SIDE.

D. SLEEVES SHALL EXTEND A MAXIMUM OF 6 INCHES (152 MM) BEYOND THE FACE OF THE WALL, PARTITION, OR FLOOR, ON EACH SIDE OF THE OPENING.

III. RETAINING ANGLES

A. RETAINING ANGLES SHALL BE INSTALLED ON ALL FOUR SIDES OF THE SLEEVE AND ON EACH SIDE OF THE PROTECTED OPENING; MINIMUM 1 1/2" X 1 1/2" X 14 GA (38 MM X 38 MM X 1.9 MM) AND 2" X 2" X 1/8" (50 MM X 50 MM X 3.2 MM) FOR LARGER DUCT SIZES.

B. RETAINING ANGLES SHALL OVERLAP THE OPENING A MINIMUM OF 1 INCH (25 MM) AROUND THE ENTIRE OPENING AND SHALL COVER CORNERS OF THE OPENING. ANGLES, HOWEVER, MUST NOT BE ATTACHED TO EACH OTHER AT THE CORNERS.

C. ANGLES ARE TO BE FASTENED TO THE SLEEVE ONLY; DO NOT FASTEN ANGLES TO THE WALL, PARTITION, OR FLOOR.

D. SECURE RETAINING ANGLES TO SLEEVES ON 8" (200 MM) CENTERS AS IN I. 3.

IV. FUSIBLE LINKS

A. NORMALLY, FUSIBLE LINKS SHALL BE RATED MIN. 165° F (74° C).

B. WHERE THE FIRE DAMPER IS PART OF A SMOKE CONTROL SYSTEM, FUSIBLE LINKS SHALL BE RATED 350° F (176° C).

V. DUCT ACCESS DOORS

A. LOCATION:

1. A DUCT ACCESS DOOR SHALL BE INSTALLED AT EACH FIRE DAMPER. ACCESS DOORS SHALL BE LOCATED SUCH THAT THE FIRE DAMPER CATCH AND FUSIBLE LINK ARE ACCESSIBLE WHEN THE FIRE DAMPER IS IN A CLOSED POSITION. IT SHOULD BE LOCATED AS CLOSE AS POSSIBLE TO THE DAMPER. EACH DOOR SHALL BE STENCILED "FIRE DAMPER ACCESS."

B. SIZE:

1. WHERE THE SIZE OF THE DUCT PERMITS, THE MINIMUM ACCESS DOOR SIZE SHALL BE 18" WIDE X 14" HIGH (457 MM x 356 MM).

2. WHERE THE DAMPER IS TOO LARGE FOR A NORMAL PERSON'S ARMS TO REACH FROM OUTSIDE THE DUCT TO RESET THE DAMPER AND REPLACE THE FUSIBLE LINK, THE ACCESS DOOR SIZE SHALL BE A MINIMUM OF 24" WIDE X 16" HIGH (610 MM X 406 MM), TO PERMIT BODY ENTRY.

3. INSTALLER SHALL DEMONSTRATE TO SANDIA OR DOE MECHANICAL CONSTRUCTION INSPECTOR, THE ABILITY OF ALL FIRE DAMPERS TO CLOSE AGAINST NORMAL SYSTEM AIR FLOW.

4. INSTALLER SHALL DEMONSTRATE RESETTING OF ALL FIRE DAMPERS TO DOE OR SANDIA MECHANICAL CONSTRUCTION INSPECTOR.

C. CONSTRUCTION:

1. DOORS SHALL BE CONSTRUCTED OF NO. 22 GAUGE (0.80 MM) GALVANIZED STEEL, DOUBLE SKINNED, AND PROVIDED WITH A FLAT IRON OR ANGLE IRON STIFFENING FRAME. THEY SHALL BE SO CONSTRUCTED THAT THEY CAN BE OPERATED WITHOUT TWISTING OR DISTORTION. DOORS ON INSULATED DUCTWORK SHALL BE OF DOUBLE PANEL CONSTRUCTION PROVIDED WITH AN APPROVED TYPE INSULATED FILLER, NOT LESS THAN 1 INCH (25.4 MM) THICK. THE DUCT OPENING AT EACH DOOR SHALL BE PROVIDED WITH A CONTINUOUS REINFORCING GALVANIZED BAR OR ANGLE AGAINST WHICH THE DOOR WILL CLOSE, AND PROVIDE WITH A SPONGE RUBBER GASKET TO MAKE THE DOOR OPENING AIRTIGHT.

2. DOOR FRAMES ON INSULATED DUCTWORK SHALL BE PLACED ON AN EXTENDED METAL DOOR FLUSH WITH THE FACE OF THE FINISHED INSULATION.

REV	DATE	DESCRIPTION	DWN	CKD	APP
	6-15-01	UDS MODS	EG	FL	
A	1/00	REVISE	YMA	DW	

P.O.
PROJECT NO.

U.S. DEPARTMENT OF ENERGY
KIRTLAND AREA OFFICE — ALBUQUERQUE, NEW MEXICO

SANDIA NATIONAL LABORATORIES

FIRE AND SMOKE DAMPER

FIRE AND SMOKE DAMPER

FIRE PROTECTION

P.O.
PROJECT NO.
DRAWN BY
CHECKED BY
SNL ENGR
DATE 1/96

SIZE D+ DRAWING NO FX5001STD SEQ.

OLD FILE NAME: 150_30.DGN

MICROSTATION FILE
FILE NAME: FX5001STD.dgn
REFERENCE FILES:

"Property of Sandia National Laboratories Facilities Management and Operation Center (FMOC). No duplication or alteration allowed without the expressed permission and authorization of FMOC."