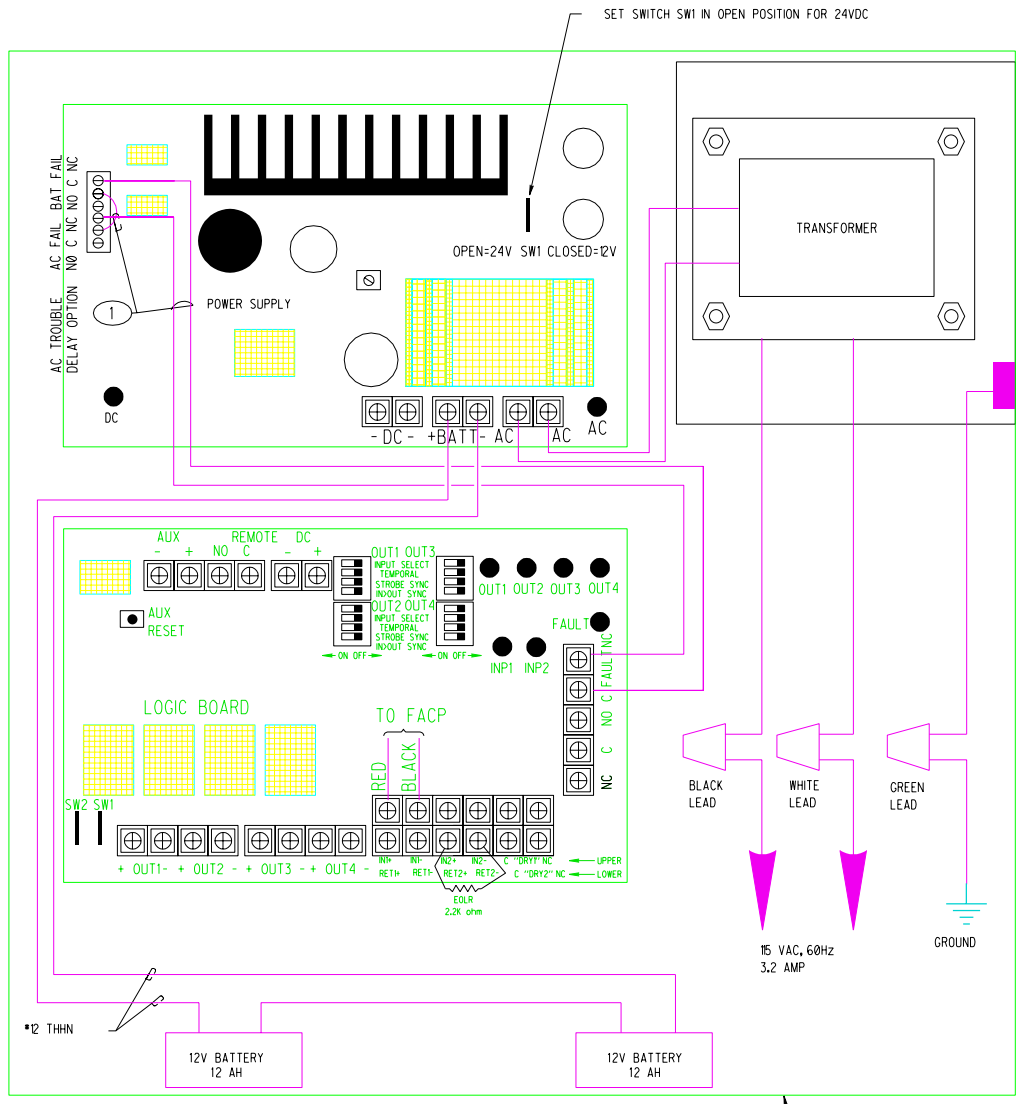

WHEELOCK POWER PATH PS-12/24-8 POWER SUPPLY DETAIL

SCALE: N.T.S.

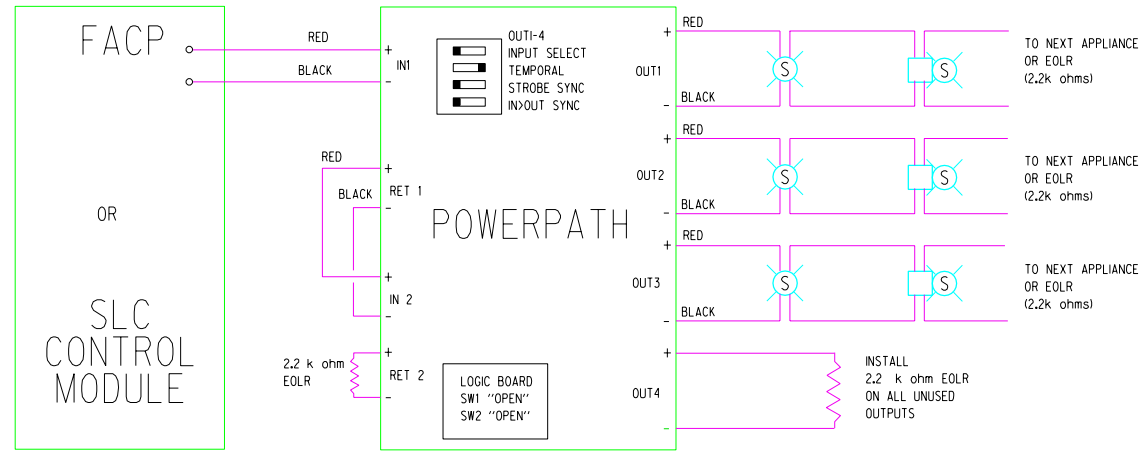

WHEELOCK SYNC MODE (CLASS "B")

SCALE: N.T.S.

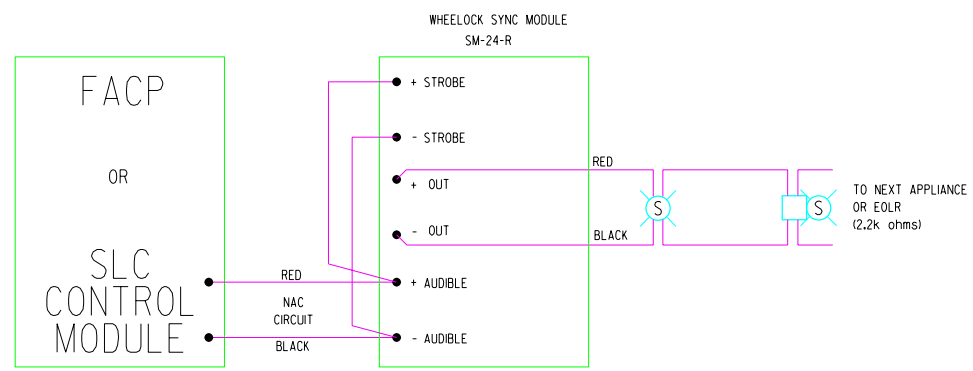

SINGLE CLASS "B" CIRCUIT WITH NO AUDIBLE SILENCE FEATURE

SCALE: N.T.S.

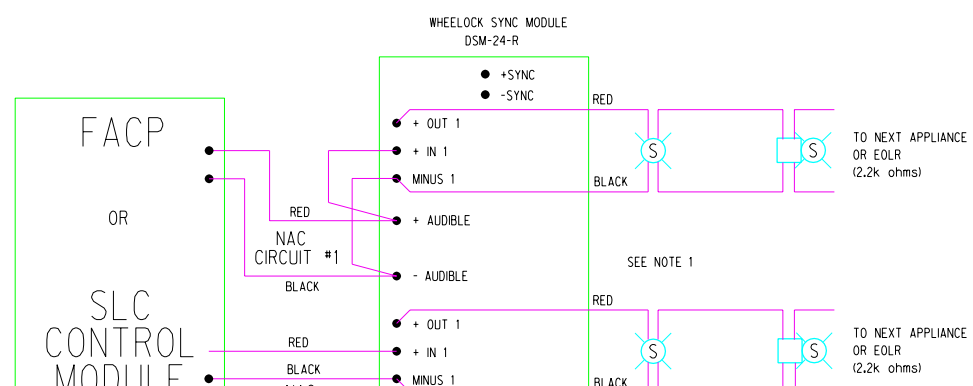

DUAL CLASS "B" CIRCUIT WITH NO AUDIBLE SILENCE FEATURE

SCALE: N.T.S.

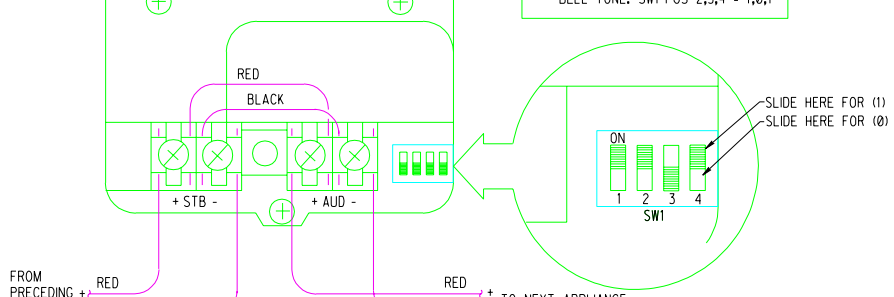

MULTITONE/STROBE COMBINATION WIRING DIAGRAM

SCALE: N.T.S

GENERAL NOTES

1. FOR EQUIPMENT SPECIFICATIONS, SEE STANDARD SPECIFICATION SECTION 13852 "INTELLIGENT FIRE ALARM SYSTEMS".
2. FOR EQUIPMENT LEGEND, SEE STANDARD DRAWING FA7001STD.
3. NOTIFICATION APPLIANCE CIRCUITS (NAC) SHALL BE WIRED AS NFPA 72 CLASS B, STYLE Y.

KEYED NOTES

1. INSTALL #12 THWN JUMPERS AS SHOWN.
2. INSTALL MIRCARTA PLATE WITH ½" BLACK BLOCK LETTERS ANODIZED ALUMINUM NAMEPLATE WITH ½" BLOCK LETTERS ON DOOR OF WHEELOCK CABINET. USE HERMES CONTACT CEMENT TO ATTACH LABEL. LABEL CABINET "PS- # " WITH " # " BEING THE SEQUENTIAL NUMBER FOR THE NUMBER OF THE WHEELOCK POWER SUPPLIES INSTALLED IN THE BUILDING (e.g., PS-1, PS-2, . . .), OR AS DESIGNATED ON THE CONSTRUCTION FLOOR PLANS.

P.O. / PROJECT NO.	REV	DATE	DESCRIPTION	DWN	CKD	APP
	B	6/15/02	FA MODS	EG	PS	
		6/15/01	UDS MODS	EG	FL	

U.S. DEPARTMENT OF ENERGY

KIRTLAND AREA OFFICE — ALBUQUERQUE, NEW MEXICO

SANDIA NATIONAL LABORATORIES

NOTIFICATION APPLIANCE WIRING DIAGRAMS

FIRE ALARM SYSTEM

FIRE PROTECTION — STANDARD

P.O.	F06772
PROJECT NO.	
DRAWN BY	TLM
CHECKED BY	
SNL ENGR	
DATE	1/24/2000
SIZE	D+
DRAWING NO	FA7002STD
SEQ.	

MICROSTATION FILE

FILE NAME: FA7002STD.dgn

REFERENCE FILES: BORDER3.dgn

Property of Sandia National Laboratories Facilities Management and Operation Center (FMOC). No duplication or alteration allowed without the expressed permission and authorization of FMOC.