FIRE ALARM DEVICE LEGEND

	DEVICE	DESIGNATION	SYMBOL	IDC WIRING DIAGRAM	SLC WIRING DIAGRAM
CABINETS/PANELS	FIRE ALARM CONTROL PANEL (INTELLIGENT)	FACP	FACP	IDC: CLASS A, STYLE D NAC: CLASS B, STYLE Y	SLC: CLASS A, STYLE 7 NAC: CLASS B, STYLE Y
	DATA GATHERING PANEL (HONEYWELL)	DGP	DGP	IDC: CLASS A, STYLE D NAC: CLASS B, STYLE Y	NOT APPLICABLE
	FIRE ALARM TERMINAL CABINET	FATC	FATC	4	NOT APPLICABLE
	ANNUNCIATOR	ANNC	ANNC	—	1
INITIATING DEVICES	MANUAL PULL STATION	PB	PB	(+) YEL NO (+) YEL (-) BLK C (-) BLK	SLC IN(+) PB SLC OUT(+) SLC IN(-) SLC OUT(-)
	SMOKE DETECTOR	SD	SD	(+) 2 NO 3 (+) C (-) 5 (-)	SLC IN(+) SD SLC OUT(+) SLC IN(-) SLC OUT(-)
	HEAT DETECTOR	HD	HD	(+) NO (+) C (-) (-)	SLC IN(+) HD SLC OUT(+) SLC IN(-) SLC OUT(-)
	DUCT DETECTOR	DD	DD	3 14 (+) (+) NO 4 24VDC + → 9 (-) C 5 (-) 24VDC - → 10	SLC IN(+) DD SLC OUT(+) SLC IN(-) SLC OUT(-)
	FLOW SWITCH	FS	FS	(+) NO (+) C (-) (-)	(+) NO (+) C (-) (-)
	PRESSURE SWITCH	PS	PS	(+) NO (+) C (-) (-)	(+) NO (+) C (-) (-)
	TAMPER SWITCH	TS	TS	(+) NO (+) C (-) (-)	(+) NO (+) C (-) (-)
MODULES	MONITOR MODULE	MM	MM	NOT APPLICABLE	1
	CONTROL MODULE	CM	CM	NOT APPLICABLE	1
	RELAY MODULE	RM	RM	NOT APPLICABLE	1
	FAULT ISOLATOR	IM	IM	NOT APPLICABLE	1
NOTIFICATION APPLIANCES	NAC POWER SUPPLY	NAC-PS	NAC-PS	SEE STANDARD DRAWING FA7002STD	SEE STANDARD DRAWING FA7002STD
	BELL, MULTITONE HORN	B	B	(+) B (+) (-) (-)	(+) B (+) (-) (-)
	MULTITONE HORN WITH STROBE	BS	B S	(+) B (+) S (+) (-) (-) (-)	(+) B (+) S (+) (-) (-) (-)
	STROBE	S	S	(+) S (+) (-) (-)	(+) S (+) (-) (-)
MSC. EQUIPMENT	FM-200 CLEAN AGENT RELEASE PANEL		FM-200	(+) NO (+) C (-) (-)	(+) NO (+) C (-) (-)
	ANALASER AIR SAMPLING CONTROL PANEL		HSSD	(+) NO (+) C (-) (-)	(+) NO (+) C (-) (-)
	MAGNETIC DOOR HOLDER	DH	DH	120V AC (+) (-)	120V AC (+) (-)

DEVICE/WIRE LABELING DETAILS

INITIATION/CONVENTIONAL DEVICE DESIGNATIONS ON FLOOR PLANS, RISER, AND WIRING DIAGRAMS.

5 TS 3
1 PB 2
4 SD 7

ZONE # — 3 FS 1 — SEQUENTIAL COUNT OF DEVICES ON ZONE; DEVICE DESIGNATION

CONVENTIONAL DEVICE AND NOTIFICATION APPLIANCE LABELING

LABEL THE ZONE NUMBER ON DEVICES USING BLACK ON WHITE BACKGROUND LABELS. LABELS SHALL BE BROTHER P-TOUCH 3 WITH TC-10 TAPE CARTRIDGE, OR EQUAL. PLACE LABEL WHERE IT CAN BE EASILY SEEN.

EXAMPLE: Z - 2 — WHITE BACKGROUND; BLACK LETTERING

INITIATING DEVICE CIRCUIT (IDC) WIRE LABELING

IDENTIFY THE ZONE NUMBER FOR EACH INITIATING DEVICE CIRCUIT (IDC) CONDUCTOR AT EACH INITIATION DEVICE TERMINATION AND SPLICE LOCATION

EXAMPLE: 2

SLC CABLE LABELING

INDENTIFY SIGNAL LINE CIRCUIT (SLC) LOOP NUMBER ON CABLE JACKET AT EVERY TERMINATION POINT.

EXAMPLE: SLC-L1 — SLC LOOP # 1; SIGNAL LINE CIRCUIT

NAC CABLE LABELING

INDENTIFY NOTIFICATION APPLIANCE CIRCUIT (NAC) ZONE NUMBER ON CABLE JACKET AT EVERY TERMINATION POINT. IF APPLIANCE IS POWERED FROM NAC POWER SUPPLY, NOTE POWER SUPPLY INDENTIFIER AND OUTPUT NUMBER.

EXAMPLES: 3 — ZONE # FROM FACP; PS2-4 — NAC POWER SUPPLY PS-2; OUTPUT 4 FROM NAC POWER SUPPLY

LABELING OF FIRE ALAM CONDUITS

INSTALL BROWN ¾" TAPE (SCOTCH #35) AT EACH CONDUIT JOINT AND TERMINATION FOR ALL FIRE ALARM CONDUITS. ADD ¾" WHITE TAPE FOR THE FIRE ALARM COMMUNICATION CONDUIT TO THE TELEPHONE IDR. ADD ¾" BLUE TAPE FOR FIRE ALARM 120V POWER AND CONTROL CIRCUITS.

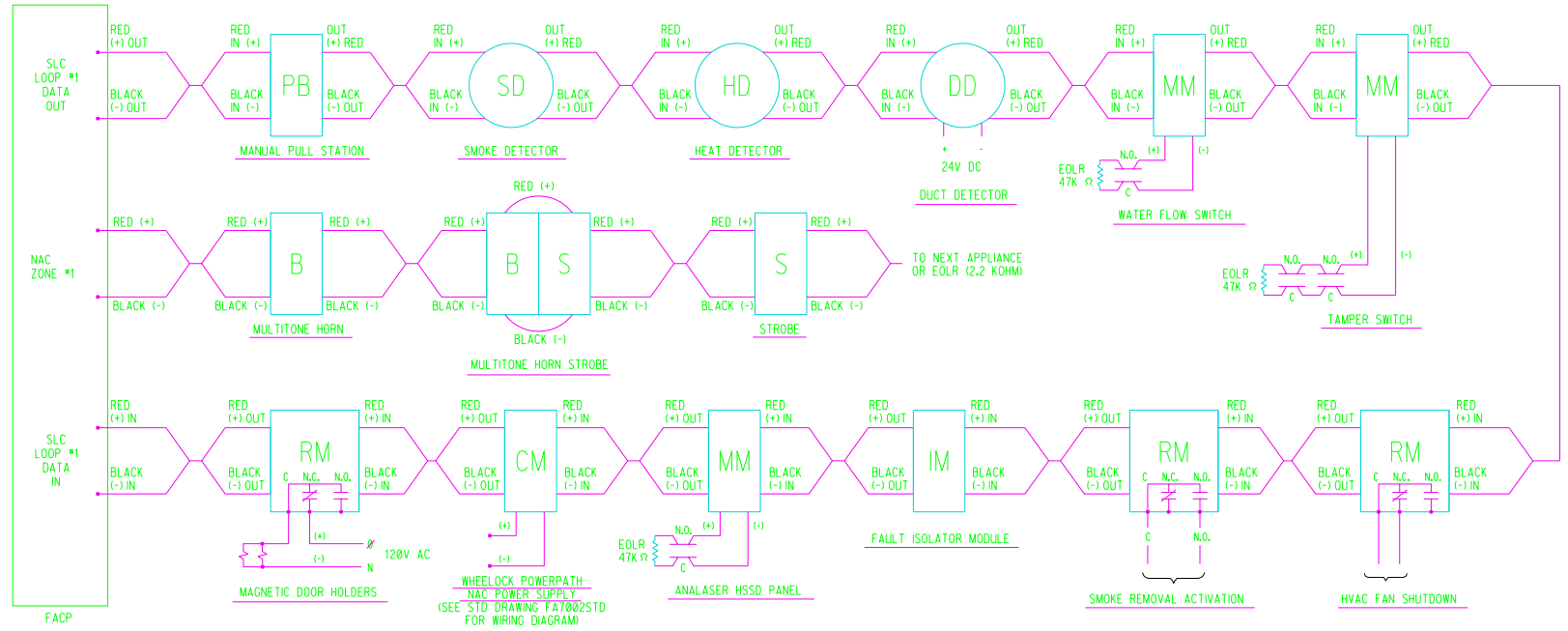

INTELLIGENT FIRE ALARM SYSTEM WIRING DIAGRAM

SCALE: NONE

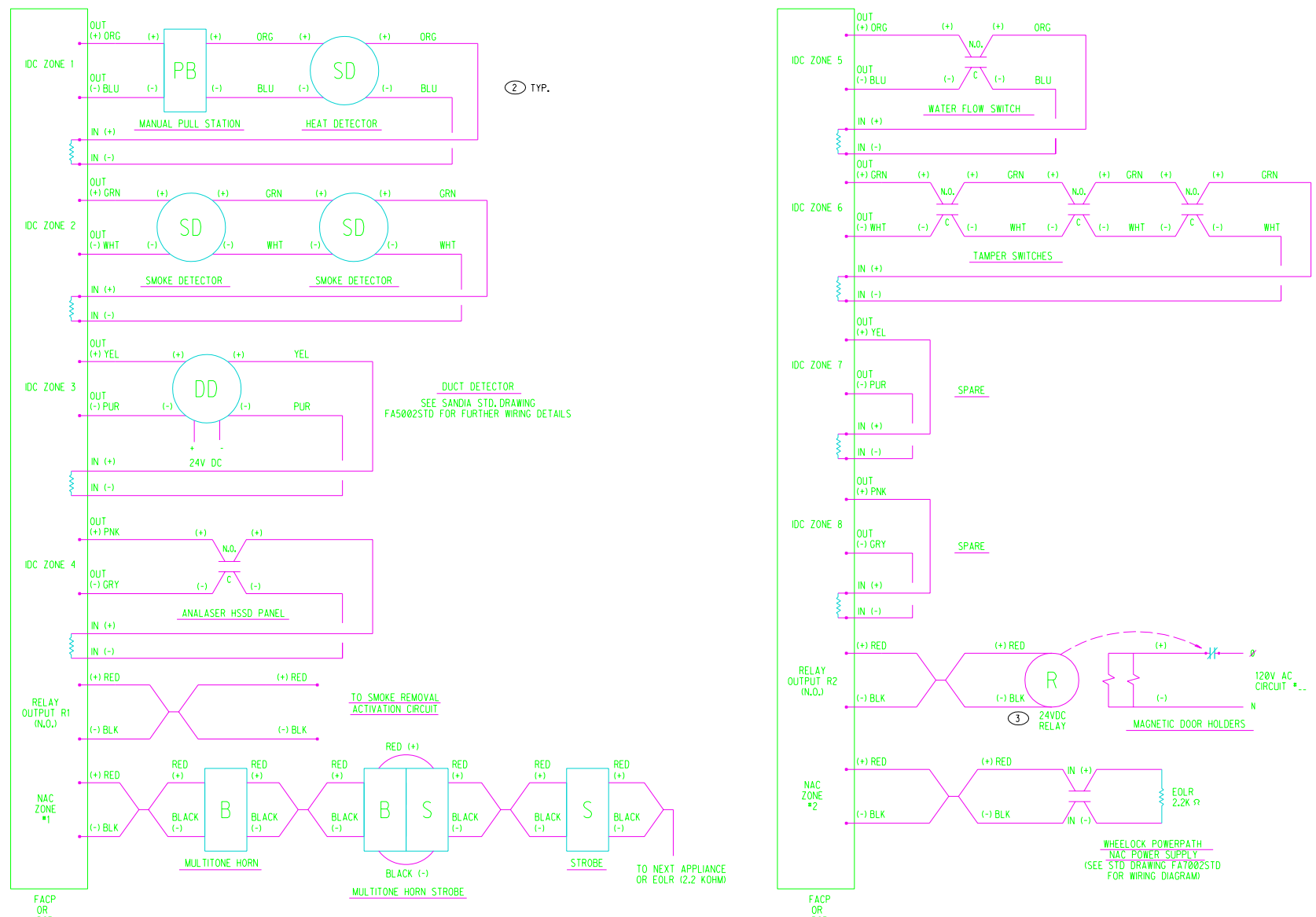

2 TYP.

CONVENTIONAL FIRE ALARM SYSTEM WIRING DIAGRAM 1

SCALE: NONE

GENERAL NOTES

1. FOR CONVENTIONAL FIRE ALARM SYSTEM EQUIPMENT SPECIFICATIONS, SEE STANDARD DRAWING FA6005STD.
2. FOR INTELLIGENT FIRE ALARM SYSTEM EQUIPMENT SPECIFICATIONS, SEE STANDARD SPECIFICATION SECTION 13852 "INTELLIGENT FIRE ALARM SYSTEM".
3. SIGNAL LINE CIRCUITS (SLC) SHALL BE WIRED AS NFPA 72 CLASS A, STYLE 7.
4. INITIATING DEVICE CIRCUIT (IDC) SHALL BE WIRED AS NFPA 72 CLASS B, STYLE D.
5. FOR FIRE ALARM SYSTEM WIRING COLOR CODE, SEE DRAWING FA5003STD.
6. NOTIFICATION APPLIANCE CIRCUITS (NAC) SHALL BE WIRED AS NFPA 72 CLASS B, STYLE Y.

KEYED NOTES

1. REFER TO THE MANUFACTURER'S SPECIFICATIONS FOR FIRE ALARM EQUIPMENT WIRING DETAILS.
2. UTILIZE 2 CONDUCTOR TWISTED SOLID #16 AWG FIRE ALARM CABLE FOR NEW IDC CONVENTIONAL ZONE INSTALLATIONS, UNLESS EXITING CONDUIT FILL CAPACITY PROHIBITS THE INSTALLATION OF CABLES.
3. INSTALL 24V DC RELAY IN 6" X 6" X 6" NEMA 1 ENCLOSURE IN LOCATION NEAR MAGNETIC DOOR HOLDERS. PAINT J-BOX COVER RED AND LABEL "120V AC INSIDE"
4. REFER TO SAMPLE FIRE ALARM TERMINAL CABINET WIRING DIAGRAM ON DRAWING #FA5003STD.

REV	DATE	DESCRIPTION	DWN	CKD	APP
6/15/02		FA MODS	EG	PS	
6-15-01		UDS MODS	EG	FL	

P.O.
PROJECT NO.

U.S. DEPARTMENT OF ENERGY
KIRTLAND AREA OFFICE — ALBUQUERQUE, NEW MEXICO

SANDIA NATIONAL LABORATORIES

FIRE ALARM WIRING DIAGRAMS	P.O.	F06772
	PROJECT NO.	
FIRE ALARM SYSTEM	DRAWN BY	TLM
	CHECKED BY	
	SNL ENGR	
FIRE PROTECTION — STANDARD	DATE	1/24/2000
	SIZE D+ / DRAWING NO FA7001STD	SEQ.

MICROSTATION FILE
FILE NAME: FA7001STD.DGN
REFERENCE FILES: BORDER3.dgn

"Property of Sandia National Laboratories Facilities Management and Operation Center (FMOC). No duplication or alteration allowed without the expressed permission and authorization of FMOC."