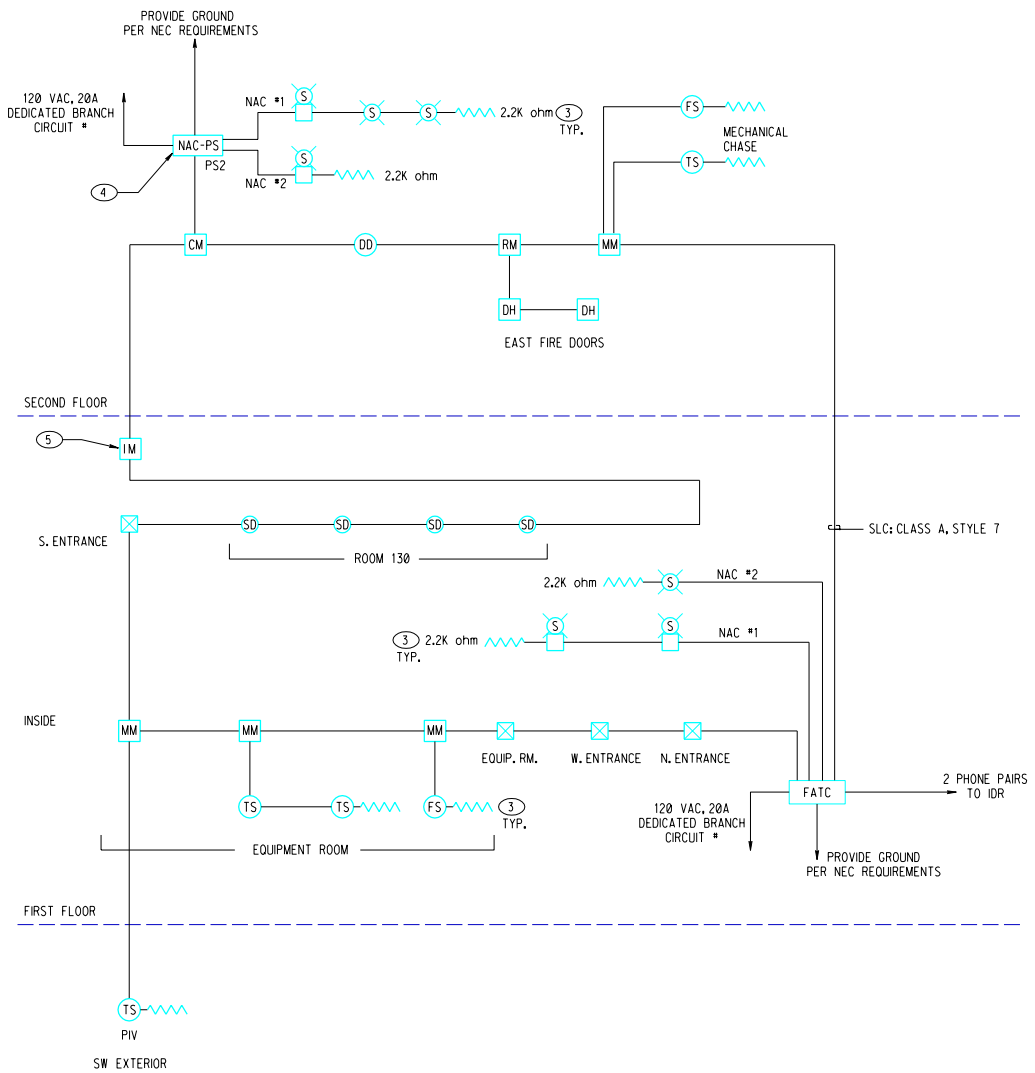

SAMPLE FIRE ALARM RISER
NTS

SYSTEM OUTPUTS

SYSTEM INPUTS	CONTROL UNIT ANNUCIATION								NOTIFICATION								REQUIRED FIRE SAFETY CONTROL								SUPPLIMENTARY							
	A	B	C	D	E	F	G	H	I	J	K	L	M	N	O	P	Q	R	S	T	U	V	W	X	Y	Z						
1 MANUAL FIRE ALARM BOXES - 1ST FL.	●	●					●	●	●			●					●						●			●	1					
2 MANUAL FIRE ALARM BOXES - 2ND FL.	●	●					●	●	●			●					●							●		●	2					
3 MANUAL FIRE ALARM BOXES - 3RD FL.	●	●					●	●	●			●					●								●	●	3					
4 SMOKE DETECTORS - 1ST FL.	●	●					●	●	●			●	●			●	●									●	4					
5 SMOKE DETECTORS - 3RD FL.	●	●					●	●	●			●	●				●									●	5					
6 SMOKE DETECTORS - 1ST FL.	●	●					●	●	●			●	●				●									●	6					
7 SMOKE DETECTORS - 1ST FL. ELEV. LOBBY	●	●					●	●	●			●		●			●									●	7					
8 2ND FL. COMPUTER ROOM - SMOKE DET. ZONE 1	●	●					●	●	●			●	●				●	●								●	8					
9 2ND FL. COMPUTER ROOM - SMOKE DET. ZONE 2	●	●					●	●	●			●	●				●		●	●						●	9					
10 IN DUCT SMOKE DETECTORS - SUPPLY FAN 1			●	●				●	●			●					●									●	10					
11 IN DUCT SMOKE DETECTORS - SUPPLY FAN 2			●	●				●	●			●					●									●	11					
12 IN DUCT SMOKE DETECTORS - 1ST FL. RETURN			●	●				●	●			●					●									●	12					
13 IN DUCT SMOKE DETECTORS - 2ND FL. RETURN			●	●				●	●			●					●									●	13					
14 IN DUCT SMOKE DETECTORS - 3RD FL. RETURN			●	●				●	●			●					●									●	14					
15 HEAT DETECTOR - 1ST FL. MECH. RM.	●	●					●	●	●			●	●				●									●	15					
16 HEAT DETECTOR - 2ND FL. STORAGE RM.	●	●					●	●	●			●	●				●									●	16					
17 HEAT DETECTOR - 3RD FL. JANITOR'S CLOSET	●	●					●	●	●			●	●				●									●	17					
18 WATERFLOW 1ST FL.	●	●					●	●	●			●	●		●	●	●			●	●					●	18					
19 WATERFLOW 2ND FL.	●	●					●	●	●			●	●		●		●			●		●				●	19					
20 WATERFLOW 3RD FL.	●	●					●	●	●			●	●		●		●			●			●			●	20					
21 SPRINKLER CONTROL VALVE 1ST FL.			●	●				●		●																	21					
22 SPRINKLER CONTROL VALVE 2ND FL.			●	●				●		●																	22					
23 SPRINKLER CONTROL VALVE 3RD FL.			●	●				●		●																	23					
24 FIRE PUMP RUNNING	●	●					●	●	●			●					●									●	24					
25 FIRE PUMP POWER FAILURE/PHASE REVERSAL			●	●				●		●																	25					
26 FIRE ALARM AC POWER FAILURE			●	●						●																	26					
27 FIRE ALARM SYSTEM LOW BATTERY					●	●					●																27					
28 OPEN CIRCUIT					●	●					●																28					
29 GROUND FAULT					●	●					●																29					
30 NOTIFICATION APPLIANCE CIRCUIT SHORT					●	●					●																30					
	A	B	C	D	E	F	G	H	I	J	K	L	M	N	O	P	Q	R	S	T	U	V	W	X	Y	Z						

SAMPLE FIRE ALARM INPUT/OUTPUT MATRIX
NTS

KEYED NOTES

1. FIRE ALARM PLANS SHALL SHOW DEVICE LOCATION IN THE HORIZONTAL PLANE. CONDUIT MAY OR MAY NOT BE SHOWN ON FIRE ALARM PLAN DEPENDING ON RUN COMPLEXITY. ALL CONDUITS SHALL BE CONCEALED WHERE POSSIBLE AND RUN PARALLEL AND PERPENDICULAR TO BUILDING WALLS.
2. A SEPARATE RISER DRAWING SHALL BE DRAWN FOR EACH BUILDING. THE RISER, WHERE POSSIBLE, SHALL LOOSELY REPRESENT LAYOUT OF THE BUILDING, AND SHALL HAVE ALL INFORMATION ON ONE SHEET. IN LARGE BUILDINGS WHERE THE RISER MUST BE DIVIDED INTO MULTIPLE SHEETS, SEPARATED BY FLOORS. NEVER SHOW DEVICES CONNECTED TOTHE SAME IDC OR SLC ON SEPARATE RISER DRAWINGS.
3. SHOW END OF LINE RESISTOR (EOLR) ON FIRE ALARM FLOOR PLANS AND RISER DIAGRAMS FOR LAST NOTIFICATION APPLIANCE ON NAC AND FOR SUPERVISED CLASS B WIRING FOR INITIATING DEVICE CIRCUITS.
4. INSTALL NOTIFICATION APPLIANCE POWER SUPPLIES THROUGHOUT THE BUILDING AS REQUIRED TO REDUCE VOLTAGE DROP AND REDUCE AMPERAGE LOAD ON FIRE ALARM CONTROL PANEL.
5. INSTALL ISOLATOR MODULES EVERY 20-25 INTIATING DEVICES OR WHEN THE SLC ENTERS ANOTHER FLOOR OR MAJOR BUILDING SECTION.

GENERAL NOTES

1. FOR EQUIPMENT SPECIFICATIONS, SEE STANDARD SPECIFICATION SECTION 13852 "INTELLIGENT FIRE ALARM SYSTEM".
2. FOR EQUIPMENT LEGEND, SEE STANDARD DRAWINGS FA7001STD.
3. SIGNAL LINE CIRCUITS (SLC) SHALL BE WIRED AS NFPA 72 CLASS A, STYLE 7.
4. INITIATING DEVICE CIRCUITS (IDC) SHALL BE WIRED AS NFPA 72 CLASS A, STYLE D.
5. NOTIFICATION APPLIANCE CIRCUITS (NAC) SHALL BE WIRED AS NFPA 72 CLASS B, STYLE Y.

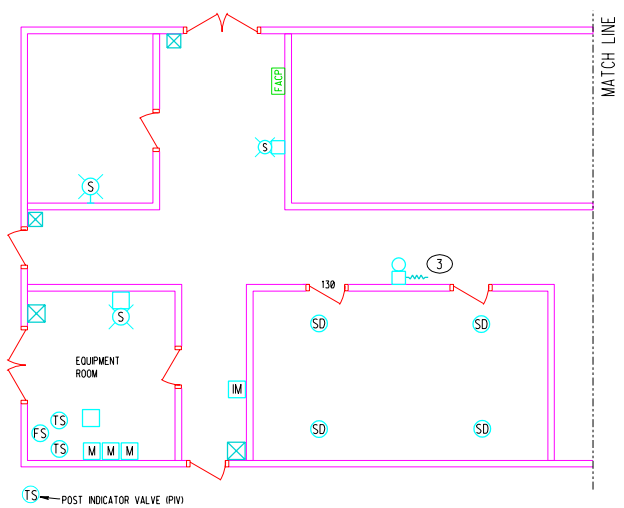

1 SAMPLE BUILDING XXXX FA PLAN
FIRST FLOOR

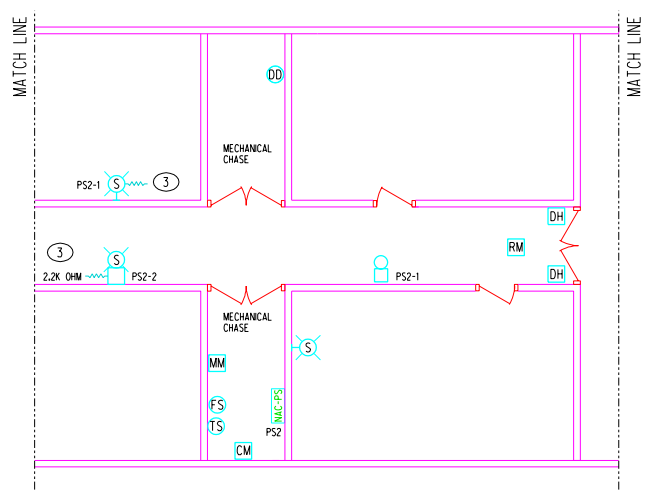

1 SAMPLE BUILDING XXX FA PLAN
SECOND FLOOR

REFERENCE DRAWING
FOR DESIGNERS.

DO NOT ISSUE FOR
CONSTRUCTION.

REV	DATE	DESCRIPTION	DWN	CKD	APP
	6/15/02	FIRE ALARM MODS	ELG	PS	
	6-15-01	UDS MODS	EG	FL	

P.O.
PROJECT NO.

U.S. DEPARTMENT OF ENERGY
KIRTLAND AREA OFFICE — ALBUQUERQUE, NEW MEXICO

SANDIA NATIONAL LABORATORIES

FIRE ALARM RISER DIAGRAM & SAMPLE-PLANS

FIRE ALARM SYSTEM

FIRE PROTECTION — STANDARD

P.O.	F06772
PROJECT NO.	
DRAWN BY	TLM
CHECKED BY	
SNL ENGR	
DATE	1/24/2000
SIZE	D+
DRAWING NO	FA1001STD
SEQ.	

MICROSTATION FILE
FILE NAME: FA001STD.dgn
REFERENCE FILES:

Property of Sandia National Laboratories Facilities Management and Operation Center (FMOC). No duplication or alteration allowed without the expressed permission and authorization of FMOC.