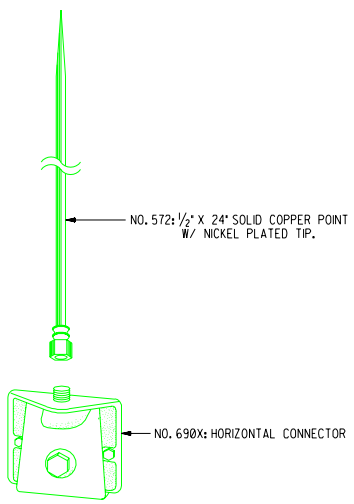

DETAIL A E1 E1
NO SCALE

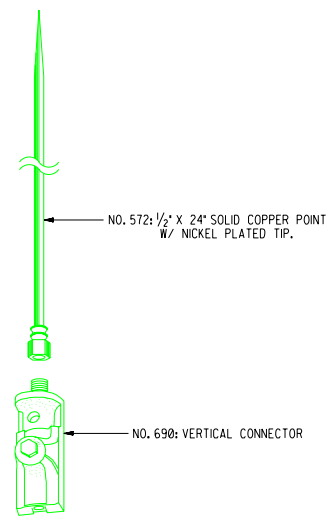

DETAIL B E1 E1
NO SCALE

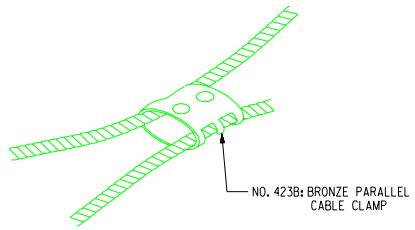

DETAIL D E1 E1
NO SCALE

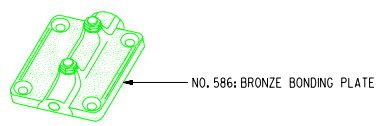

DETAIL C E1 E1
NO SCALE

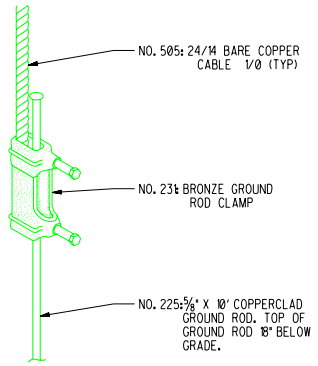

DETAIL G E1 E1
NO SCALE

GENERAL NOTES

1. SYSTEM SHALL RECEIVE UL CERTIFICATE OF COMPLIANCE.
2. STEEL SHALL BE CLEAN AND BARE FOR ALL BONDS.
3. ALL STEEL IN MAGAZINE SHALL BE ELECTRICALLY CONTINUOUS AND SHALL BE TIED INTO THE LIGHTNING PROTECTION SYSTEM.
4. ALL PART NUMBERS REFERRED TO IN DETAILS ARE "THOMPSON LIGHTNING PROTECTION, INC." CAT NUMBERS
5. THE RESISTANCE OF ANY POINT ON THE LIGHTNING PROTECTION SYSTEM TO GROUND SHALL NOT BE MORE THAN 10 OHMS.
6. BENDS IN LIGHTNING CONDUCTOR CABLE SHALL NOT BE GREATER THAN 90° AND SHALL HAVE A MINIMUM RADIUS OF 8".
7. DEVELOP SITE SPECIFIC DRAWINGS USING THE LATEST NFPA780, UL96 AND UL96A LIGHTNING PROTECTION REQUIREMENTS.

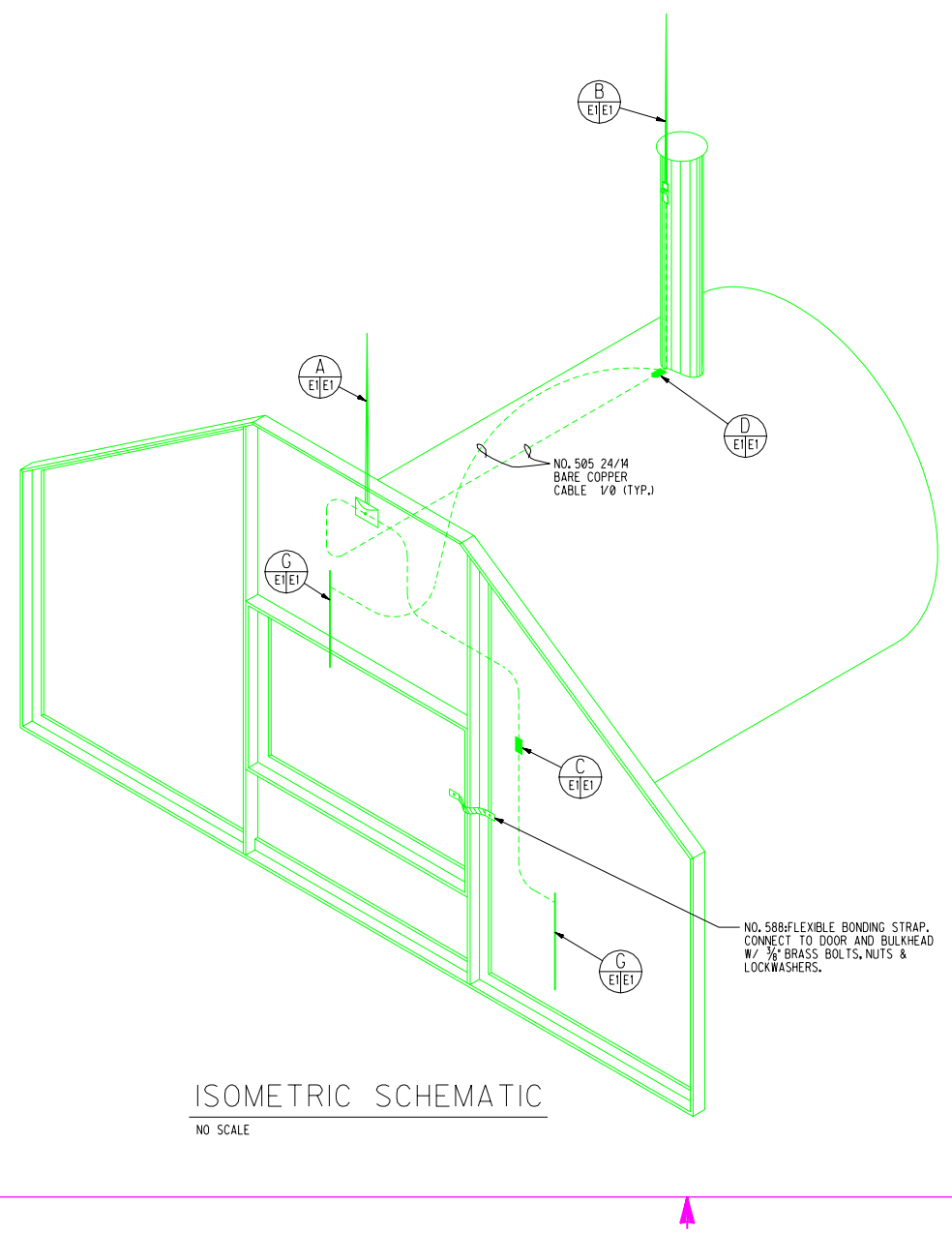

ISOMETRIC SCHEMATIC
NO SCALE

NOT TO BE USED AS A STANDARD DRAWING
DO NOT ISSUE FOR CONSTRUCTION

REV	DATE	DESCRIPTION	DWN	CKD	APP
	6-15-01	UDS MODS	EG	FL	

P.O.
PROJECT NO.

U.S. DEPARTMENT OF ENERGY
KIRTLAND AREA OFFICE — ALBUQUERQUE, NEW MEXICO
SANDIA NATIONAL LABORATORIES

LIGHTNING PROTECTION STORAGE MAGAZINE

P.O.
PROJECT NO.
DRAWN BY: MCCARSON
CHECKED BY: SMITH
SNL ENGR
ELECTRICAL — STANDARD
DATE: 8/20/91
SIZE: D+ — DRAWING NO: ES9003STD — SEQ.

OLD FILE NAME: 090462E01
MICROSTATION FILE
FILE NAME: ES9003STD.dgn
REFERENCE FILES:

"Property of Sandia National Laboratories Facilities Management and Operation Center (FMOC). No duplication or alteration allowed without the expressed permission and authorization of FMOC."