NOTE:
BOND DOOR HANDLE & HINGES TOGETHER USING 1/2" BRASS STRIPS. USE 1/4" BRAID TO JUMPER HINGES & TO GROUND BOTH HINGES. GROUND DOOR HATCH W/ 1/4" BRAID. IF DOOR IS METAL GROUND DOOR & DOOR FRAME USING 1/4" BRAID.

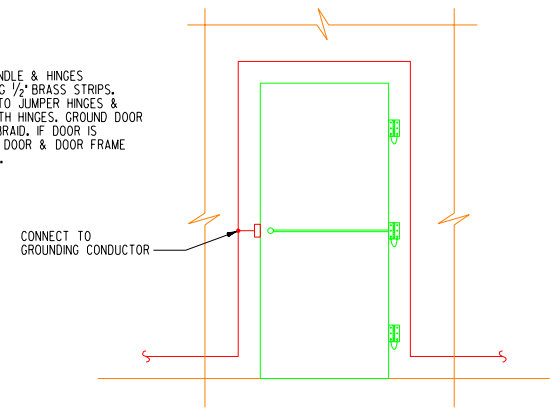

TYPICAL DOOR

NO SCALE

NOTE:
SEAM CONNECTORS TO BE INSTALLED ACROSS EACH END & EACH SEAM & @ APPROX. 3'-0" INTERVALS ALONG SEAM.

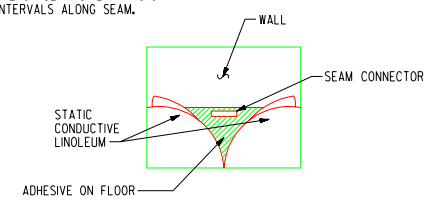

NOTE:
SEAM CONNECTORS TO BE APPLIED UNDER SEAM POINTS PROJECTING UPWARDS CONNECTING TWO ADJOINING SHEETS OF STATIC CONDUCTIVE LINOLEUM. AS LINOLEUM IS APPLIED OVER POINTS TAP SURFACE W. HAMMER TO INSURE FASTENING.

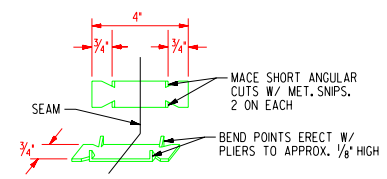

SEAM CONNECTOR

NOTE:
SEAM CONNECTOR AND GROUNDING CONNECTOR TO BE COMPOSED OF BRASS .016, HALF HARD. GROUNDING CONNECTORS TO BE APPLIED UNDER LINOLEUM SIMILAR TO SEAM CONNECTORS.

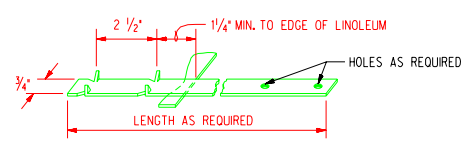

GROUNDING CONNECTOR

(PREPARE SIMILAR TO SEAM CONNECTOR)

TYPICAL CABINETS

1. INSTALL GROUNDING CONDUCTORS UNDER STATIC CONDUCTIVE LINOLEUM ON EACH SHELF OF CABINETS SIMILAR TO METHOD USED FOR BENCH TOPS & CHAIRSEATS.
2. BOND EACH GROUNDING CONNECTOR TO METAL CABINETS AND GROUND METAL CABINET TO GROUNDING CONDUCTOR.
3. USE GROUNDING CONNECTORS AND 1/4" BRAID AS REQUIRED.

GENERAL NOTES:

1. MAKE ALL GOUNDING CONNECTIONS CAREFULLY TO INSURE GOOD LOW RESISTANCE GROUNDING. WHERE NECESSARY, REMOVE PAINT OR OTHER MATERIAL TO GOOD CONNECTIONS.
2. INSTALL GROUNDING CONNECTORS UNDER EACH END OF EACH STRIP OF STATIC CONDUCTIVE LINOLEUM ON FLOORS. IF STRIP OF LINOLEUM ADJOINING WALLS IS OVER 20' LONG, INSTALL GROUNDING CONNECTORS @ 10'-0" INTERVALS ALONG EDGE OF LINOLEUM IN ADDITION TO CONNECTORS @ EACH END OF STRIP.
3. WHENEVER STATIC-CONDUCTIVE LINOLEUM IS TO BE USED, BE SURE GROUNDING CONNECTORS AS REQUIRED, ARE IN PLACE BEFORE LINOLEUM SLAB.
4. USE BRASS SCREWS, WASHER & NUTS WHERE NECESSARY. USE 1/4" BRAID TO CONNECT BENCHES, CABINETS, ETC. TO GROUNDING CONDUCTOR.
5. MAKE RESISTANCE CHECKS BETWEEN VARIOUS METAL PARTS OF BENCHES, CABINETS, ETC. TO INSURE LOW RESISTANCE BONDING. IF ANY RESISTANCE ABOVE ONE OHM IS MEASURED WHILE MAKING CHECKS-BONDING BETWEEN METAL PARTS MUST BE INPROVED BY REMOVING PAINT AROUND BONDING POINTS & TIGHTENING CONNECTIONS.
6. BOND ALL METAL OBJECTS EXCEPT CONDUIT & FITTING & METAL OBJECTS BONDED TO CONDUIT SYSTEM THAT ARE 7'-6" OR LESS ABOVE FLOOR TO GROUNDING CONDUCTOR. THIS SHALL INCLUDE METAL SHANKS OF ALL STANDOFF INSULATORS FOR STATICATOR ANTENNA SYSTEMS. #14(GRN) SHALL BE USED FOR THIS BONDING & WHERE NECESSARY SOLDER WIRE TO THE METAL OBJECTS. THIS BONDING SHALL INCLUDE STATICATOR SHELF BRACKETS.
7. REMOVE ANY LACQUER, ETC. WHICH MAY CAUSE HIGH RESISTANCE TO GROUND FROM DOOR KNOBS & OTHER REGULARLY HANDLED METAL OBJECTS.
8. THE #6 GROUNDING CONDUCTOR SHALL BE CONNECTED TO A GOOD GROUND SUCH AS A C.W. PIPE (NOT SPRINKLER SYSTEM PIPE) OR A GROUND MAT SHALL BE INSTALLED W/ GROUND RODS. IF THE GROUNDING CONDUCTOR IS ATTACHED TO A LIGHTNING PROTECTION SYSTEM CONTERPOISE THE POINT OF ATTACHMENT SHALL BE 6' BELOW THE GROUND LINE.

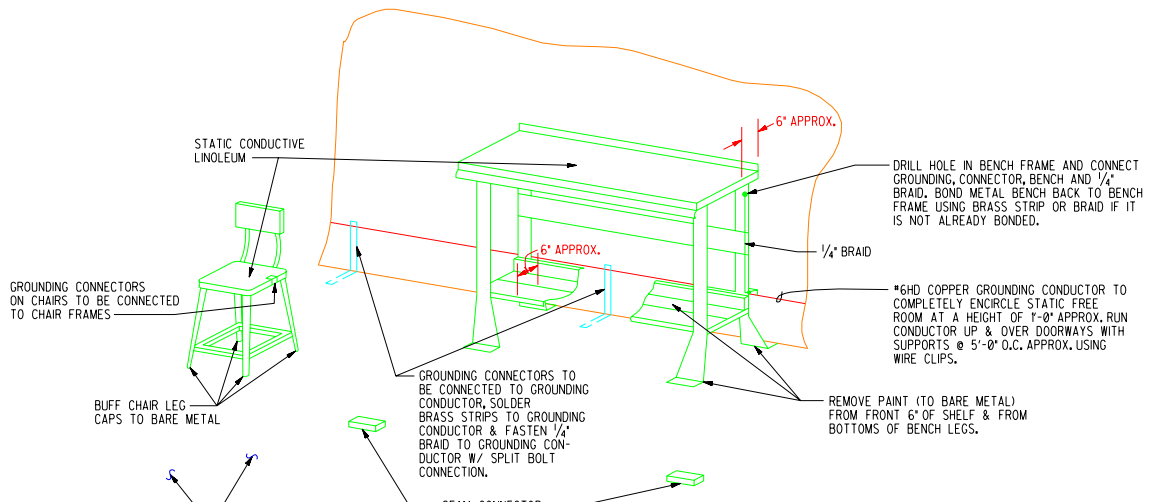

TYPICAL BENCH & STOOL

NO SCALE

P.O. / PROJECT NO.	REV	DATE	DESCRIPTION	DWN	CKD	APP
		6-15-01	UDS MODS	EG	FL	

U.S. DEPARTMENT OF ENERGY
KIRTLAND AREA OFFICE — ALBUQUERQUE, NEW MEXICO
SANDIA NATIONAL LABORATORIES

P.O.	
PROJECT NO.	
DRAWN BY	MC CARSON
CHECKED BY	SMITH
SNL ENGR	
DATE	8/27/91
SEQ.	

ELECTRICAL — STANDARD

SIZE D+ — DRAWING NO ES5016STD

OLD FILE NAME: 070618E01

MICROSTATION FILE
FILE NAME: ES5016STD.dgn
REFERENCE FILES:

"Property of Sandia National Laboratories Facilities Management and Operation Center (FMOC). No duplication or alteration allowed without the expressed permission and authorization of FMOC."