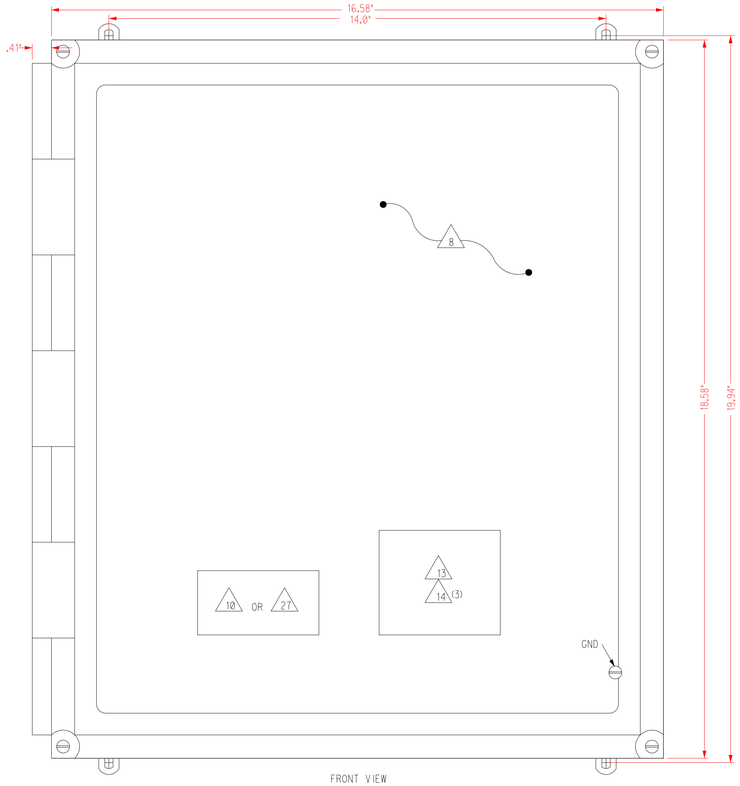

FRONT VIEW
W/COVER & SWING OUT PANEL REMOVED

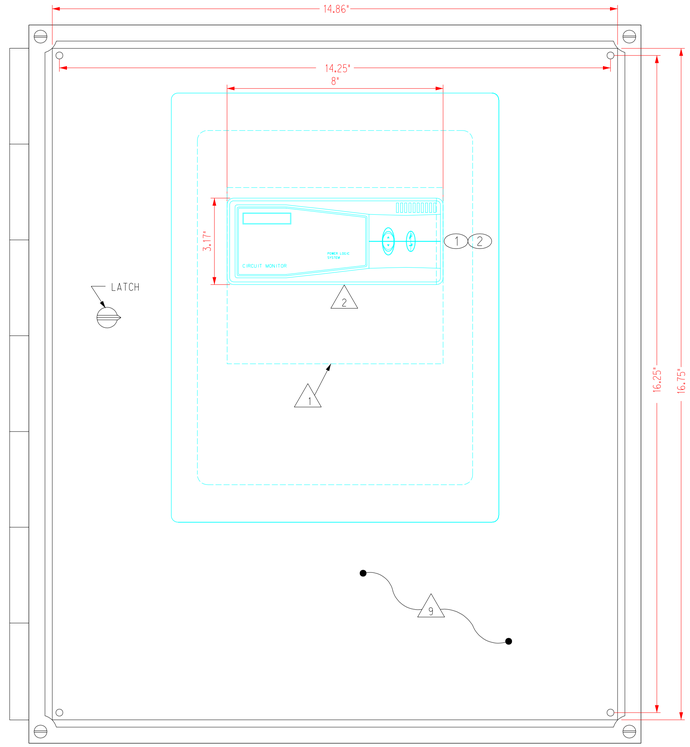

FRONT VIEW
W/COVER REMOVED

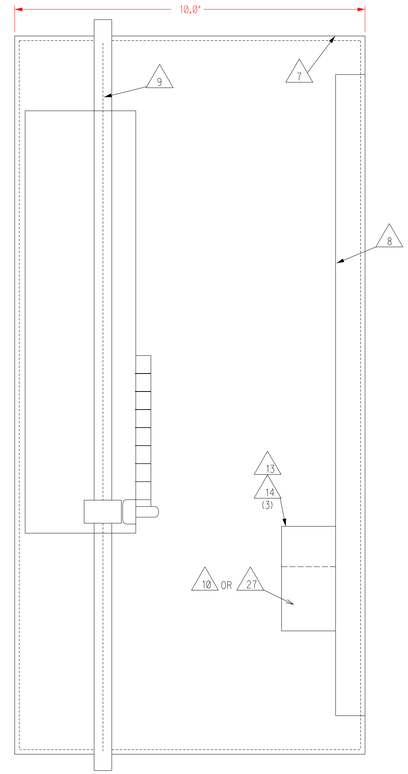

SIDE VIEW

GENERAL NOTES

1. SEE DRAWING NO. E17011 STD AND E17015 FOR METERING WIRING DETAILS.
2. SEE DRAWING NO. E16004STD FOR METERING EQUIPMENT LIST.
3. WIRING COLORS AND CONVENTIONS MUST BE FOLLOWED THROUGHOUT.
4. METER ENCLOSURE DETAILS FOR INFORMATION PURPOSES ONLY. REFER TO MANUFACTURER'S REFERENCE MANUALS FOR DETAILED INSTALLATION AND TERMINATION INSTRUCTIONS.

KEYED NOTES

1. USE MOUNTING ADAPTER 4 FOR NEW CM-3250 INSTALLATIONS.
2. USE MOUNTING ADAPTER KIT 5 FOR CM-3250 RETROFITS INTO EXISTING CM-2X50 INSTALLATIONS.

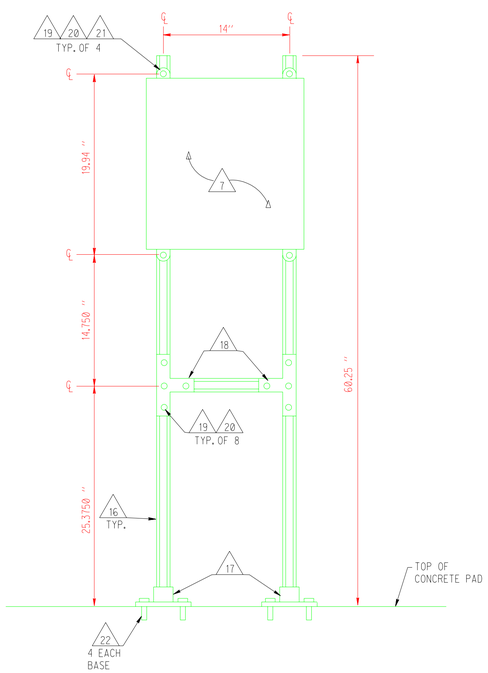

FRONT ELEVATION

CIRCUIT MONITOR ENCLOSURE MOUNTING DETAIL

SCALE: 1/2" = 1'-0"

CIRCUIT MONITOR ENCLOSURE

SCALE: N.T.S.

REV	DATE	DESCRIPTION	DWN	CKD	APP
D	7/03	UPDATE, CM3220 METER	MIP	JR	
C	12/1/02	UPDATE	EG	JR	
B	6/15/02	UPDATE	EG	JR	
A	6-15-01	UDS MODS	EG	FL	

P.O.
PROJECT NO.

U.S. DEPARTMENT OF ENERGY
KIRTLAND AREA OFFICE — ALBUQUERQUE, NEW MEXICO

SANDIA NATIONAL LABORATORIES

METERING CIRCUIT MONITOR ENCLOSURE & DTLS

METERING

ELECTRICAL — STANDARDS

P.O.	TW-0740
PROJECT NO.	AW7088
DRAWN BY	H&N/TLM
CHECKED BY	H&N/RK
SNL ENGR	
DATE	9/20/95
SIZE	D+
DRAWING NO	E15001STD
SEQ.	

OLD DWG. #1 05731 E01

MICROSTATION FILE
FILE NAME: e15001std.dgn
REFERENCE FILES: BORDER3.DGN

"Property of Sandia National Laboratories Facilities Management and Operation Center (FMOC). No duplication or alteration allowed without the expressed permission and authorization of FMOC."