OLD FILE NAME: 15J 6.dgn

PREPARED BY:	SANDIA NATIONAL LABORATORIES FACILITIES ENGINEERING	DETAIL NO.: DJ5008
CHECKED BY:		SCALE: NONE
DATE: 6-15-01 / REV: C	HOSE REEL DETAILS	PROCESS STANDARD

75 SCFM (35 mm /S) MAX. CAPACITY

@ 125 P.S.I. (862.5 KPa) (INLET)

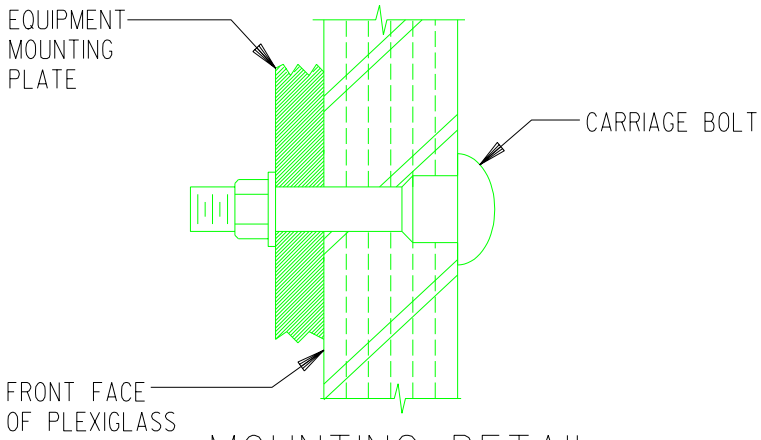

MOUNTING DETAIL

10 SCFM + 75 SCFM
(4.7 mm ^{3}/S) + (35 mm ^{3}/S)

7" X 10" (.75 mm X 250 mm) VINYL "SCOTCH CAL" LABEL YELLOW BACKGROUND WITH BLACK LETTERS

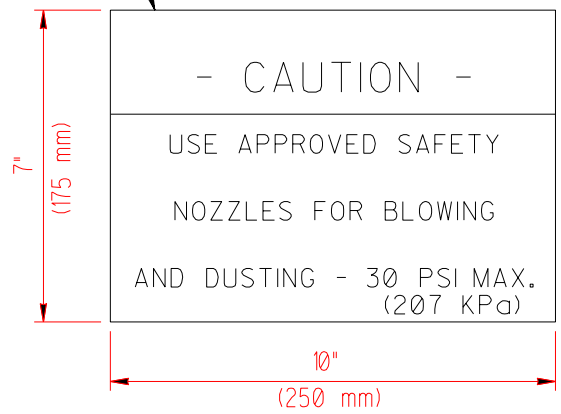

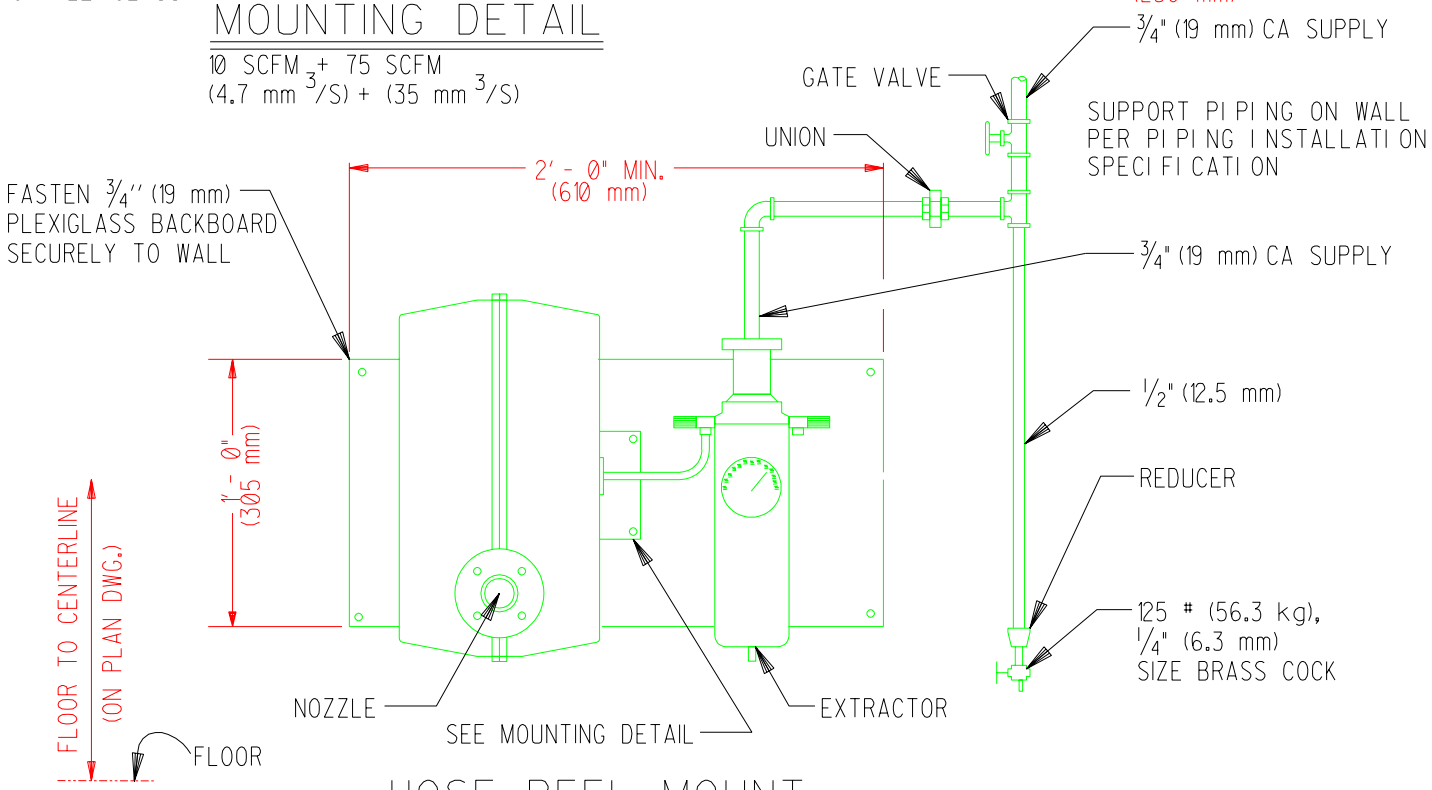

HOSE REEL MOUNT

OIL, WATER EXTRACTOR: BINKS MOD A0-120. CAPACITY 75 C.F.M. (35 mm ^{3}/S)
HOSE REEL; CLOSED TYPE 1/4" (6.3 mm) I.D. HOSE FOR AIR SERVICE. SCHRADER 12 FT (3.7 M), 25 FT (7.6 M), 50 FT (15.3 M).

NOZZLE: "SAFE-T-BLOW" FOR DUSTING, GUARDAIR SAFETY NOZZLE FOR CHIP REMOVAL.

"Property of Sandia National Laboratories Facilities Management and Operation Center (FMOC). No duplication or alteration allowed without the expressed permission and authorization of FMOC."