OLD FILE NAME: 15J 5.dgn

PREPARED BY:	SANDIA NATIONAL LABORATORIES FACILITIES ENGINEERING	DETAIL NO.: DJ5004
CHECKED BY:		SCALE: NONE
DATE: 6-15-01 / REV: D	HOSE REEL DETAILS	PROCESS STANDARD

10 SCFM (4.7 mm^3/S) MAX. CAPACITY @ 125 P.S.I. (862.5 KPa) (INLET)

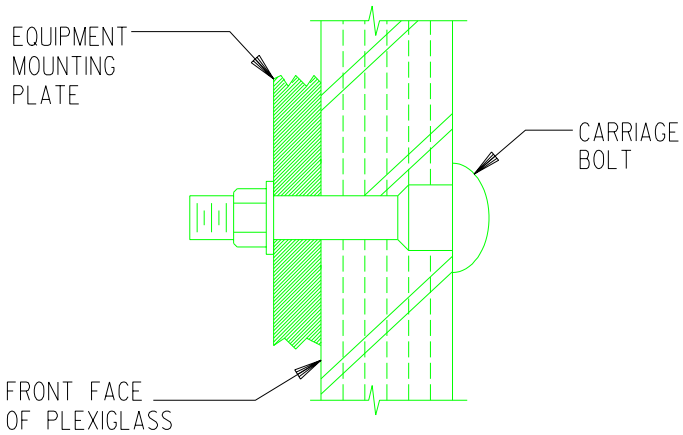

MOUNTING DETAIL

10 SCFM + 75 SCFM
(4.7 mm^3/S) + (35 mm^3/S)

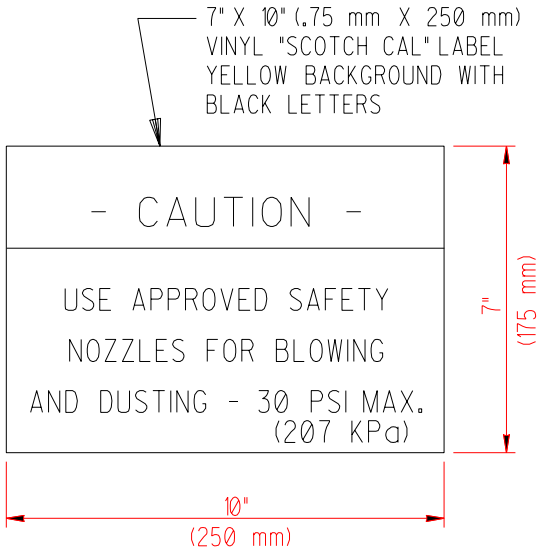

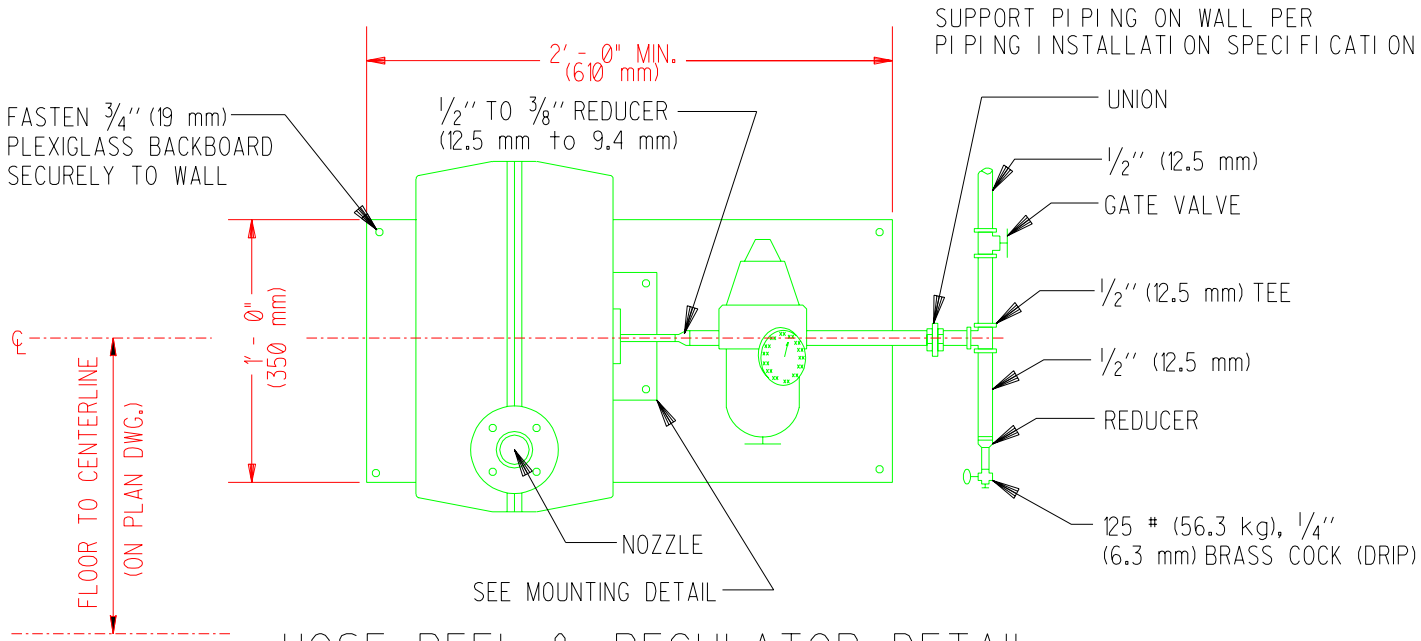

HOSE REEL & REGULATOR DETAIL

WILKERSON FILTER/REGULATOR POLYCARBONATE BOWL/BOWL GUARD CB6-04-000, 1/2" PORT SIZE, 5 MICRON FILTER, ADJUSTABLE RANGE 0-125 P.S.I.G. WITH PRESSURE GAUGE

NOZZLE: "SAFE-T-BLOW" FOR DUSTING, GUARDAIR SAFETY NOZZLE FOR CHIP REMOVAL.

HOSE REEL: SCHRADER CLOSED TYPE, 12 FT (3.7 M), 25 FT (7.6 M), 50 FT (15.3 M)

"Property of Sandia National Laboratories Facilities Management and Operation Center (FMOC). No duplication or alteration allowed without the expressed permission and authorization of FMOC."