OLD FILE NAME: 15J 54.dgn

PREPARED BY:	SANDIA NATIONAL LABORATORIES FACILITIES ENGINEERING	DETAIL NO.: DJ5003
CHECKED BY:		SCALE: NONE
DATE: 6-15-01 / REV: C	GAS REGULATOR	PROCESS STANDARD

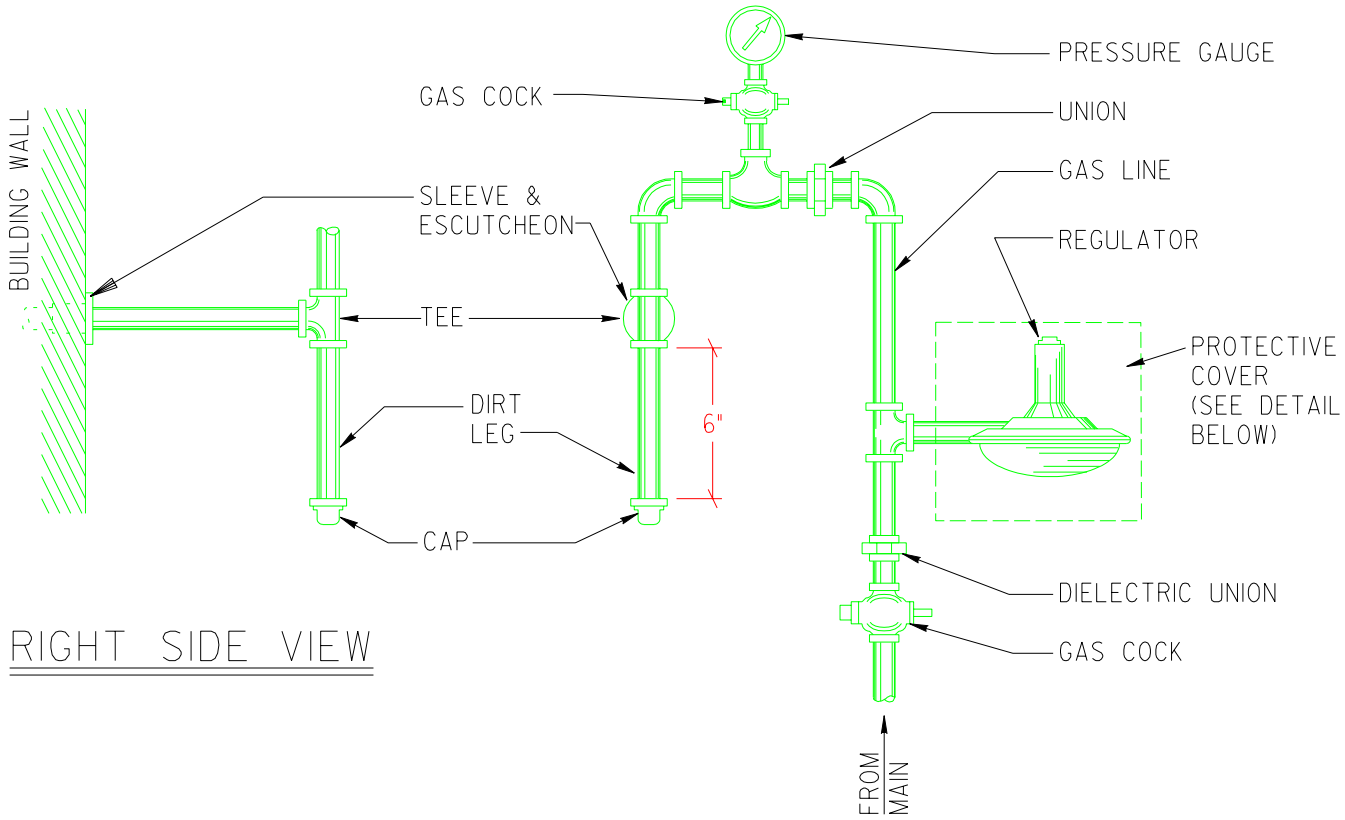

RIGHT SIDE VIEW

FRONT VIEW

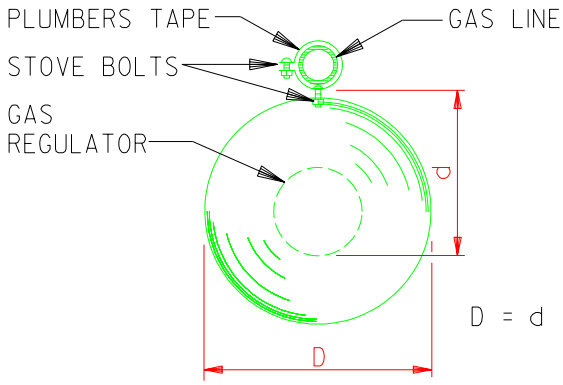

D = d + 1/2'' MIN.

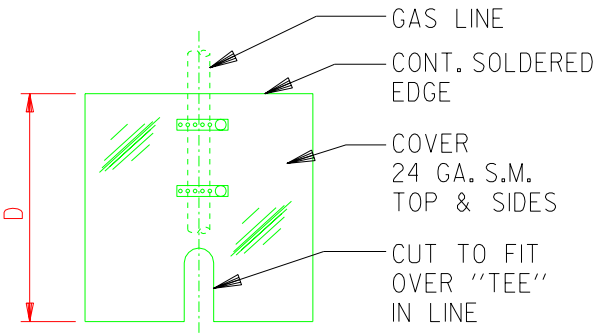

TOP VIEW

SIDE VIEW

"Property of Sandia National Laboratories Facilities Management and Operation Center (FMOC).
No duplication or alteration allowed without the expressed permission and authorization of FMOC."