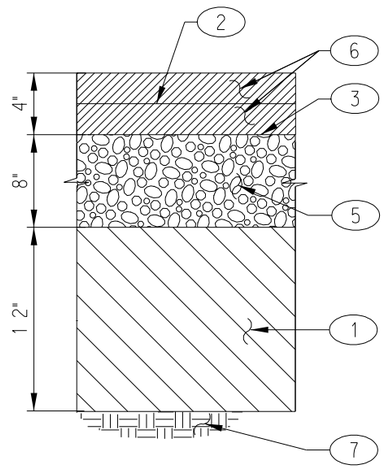

PAVEMENT SECTION
PRIMARY STREETS/
HEAVY TRUCKS (HS20) LOADING

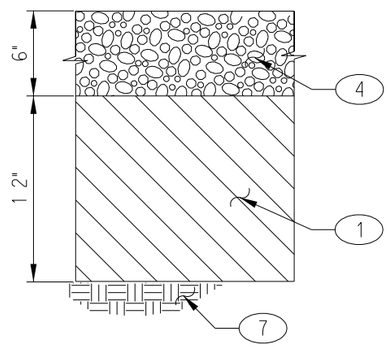

GRAVELED ROADWAY SECTION

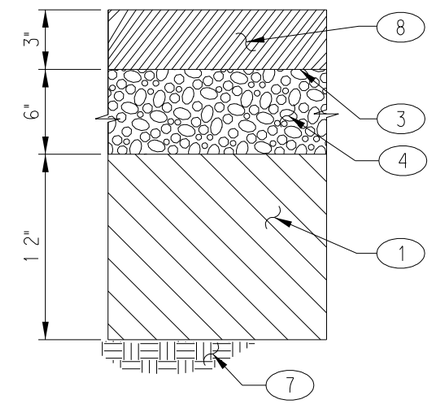

PAVEMENT SECTION - SECONDARY STREETS

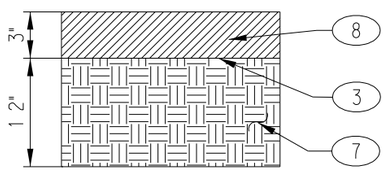

PAVEMENT SECTION
TEMPORARY DETOUR

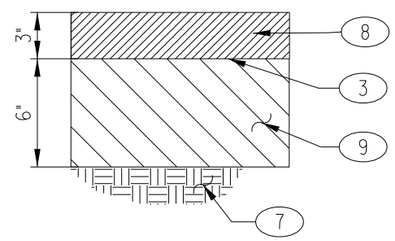

PAVEMENT SECTION - PARKING LOT OR
PEDESTRIAN TRAIL

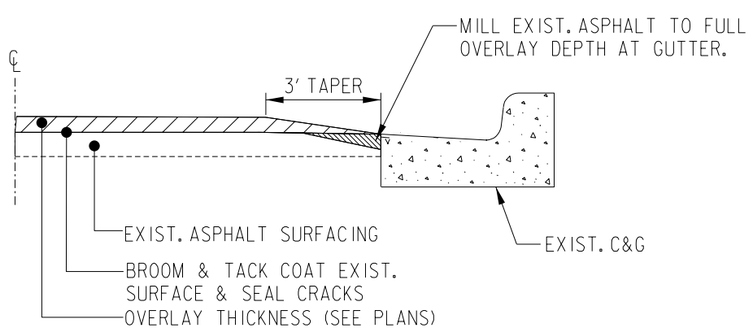

ASPHALT OVERLAY SECTION
AT TRANSITION TAPER TO EXIST
CURB & GUTTER

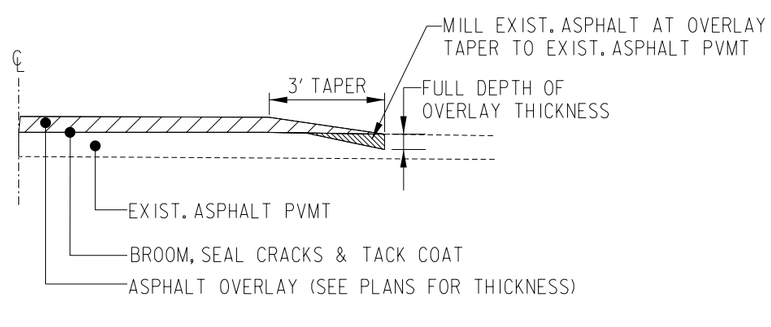

ASPHALT OVERLAY SECTION
TRANSITION TAPER TO EXIST. PVMT

GENERAL NOTES

1. DEPTHS SHOWN ARE MINIMUMS & ARE BASED ON A DESIGN R-VALUE OF 23. MATERIAL WITH AN R-VALUE LESS THAN 23 SHALL NOT BE PLACED IN OR ALLOWED TO REMAIN WITHIN THE TOP 2 FT. OF FINISHED SUBGRADE.
2. FIVE TRUCKS PER DAY ASSUMED FOR "PRIMARY STREET" (HS-20) LOADING". APPROPRIATE ADJUSTMENTS SHOULD BE MADE FOR GREATER LOADINGS. PRIMARY STREET SECTION SHOULD BE USED AT LOADING DOCKS.
3. CONTRACTOR SHALL MAINTAIN POSITIVE SURFACE DRAINAGE, WITH MINIMUM ½ PERCENT SLOPE IN THE DIRECTION OF DRAINAGE, AND MINIMUM 2% CROSS SLOPE FOR STREET PAVEMENT SECTION.
4. CONTRACTOR SHALL REMOVE, CLEAR & REPLACE ALLIGATORED AREAS, REMOVE & REPLACE ALL DAMAGED UTILITY CUTS, ROUTE ALL CRACKS LESS THAN ½" WIDTH & CRACK FILL ALL CRACKS PRIOR TO PLACEMENT OF OVERLAYS & SEAL COAT.

KEYED NOTES

1. 12" SUBGRADE PREPARATION 95% D1557 MODIFIED PROCTOR
2. TACK COAT AS REQUIRED BY SPECIFICATIONS.
3. PRIME COAT AS REQUIRED BY SPECIFICATIONS.
4. 6" AGGREGATE BASECOURSE PLACED, ROLLED & COMPACTED IN ONE LIFT 95% D1557 MODIFIED PROCTOR
5. 8" AGGRAGATE BASE COURSE PLACED, ROLLED AND COMPACTED 95% D1557 MODIFIED PROCTOR EACH BASECOURSE LIFT SHALL BE PLACED IN LIFTS WHICH WILL PROVIDE NOT LESS THAN 4" AND NOT MORE THAN 6" COMPACTED THICKNESS.
6. 4" ASPHALT SURFACE COURSE, 1800 LB (8000 N) STABILITY PLACED IN TWO-2" LIFTS. BOTTOM LIFT SHALL BE GRADATION TYPE "B". TOP LIFT SHALL BE GRADATION TYPE "C".
7. COMPACTED FILL OR UNDISTURBED EARTH. 95% D1557
8. 3" ASPHALT SURFACE COURSE, 1500 LB (6670N) STABILITY PLACED IN ONE LIFT GRADATION TYPE "C".
9. 6" SUBGRADE PREPARATION 95% D1557 MODIFIED PROCTOR
10. COLD MILL AT ALL CONNECTIONS/TRANSITIONS TO EXISTING ASPHALT.
11. OVERLAY 2" ASPHALT SURFACE COURSE, 1500 LB (6670N) STABILITY PLACED IN ONE LIFT GRADATION TYPE C.
12. EXISTING ASPHALT SURFACE COURSE.

P.O. PROJECT NO.	REV	DATE	DESCRIPTION	DWN	CKD	APP
	C	3/19/03	UPDATE - REMOVED METRIC NOTATIONS			
	B	6/15/01	UDS MODS			
	A	8/00	REVISED TO ADD SECTIONS			

U.S. DEPARTMENT OF ENERGY
NNSA/SANDIA SITE OFFICE — ALBUQUERQUE, NEW MEXICO
SANDIA NATIONAL LABORATORIES

PAVEMENT SECTIONS

ASPHALT PAVEMENT SECTIONS

P.O.	
PROJECT NO.	
DRAWN BY	MP
CHECKED BY	
SNL ENGR	CS, TR
DATE	6/3/04

CIVIL — STANDARD
SIZE D+ — DRAWING NO. CP3002STD — SEQ.

MIRCOSTATION FILE
FILE NAME:
REFERENCE FILES:

"Property of Sandia National Laboratories Facilities Management and Operation Center (FMOC). No duplication or alteration allowed without the expressed permission and authorization of FMOC."