BILL OF MATERIALS

ORIG. QUANT.	STOCK OR P.O. NO.	DESCRIPTION

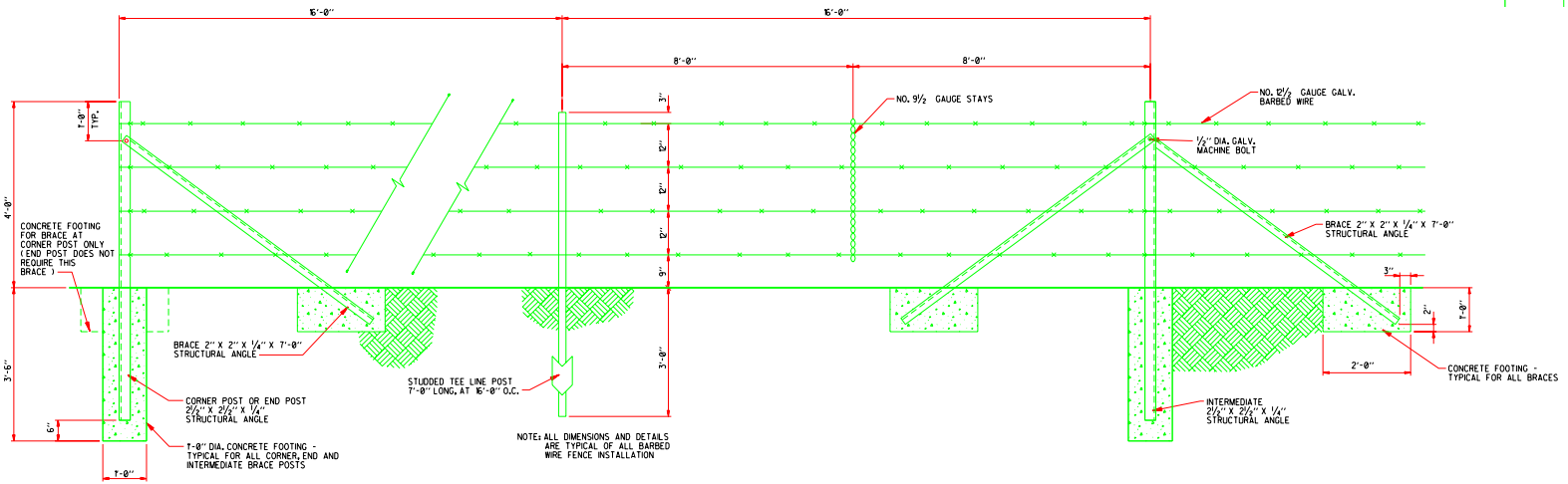

ELEVATION OF FENCE, LINE POST, END POST, CORNER POST, AND INTERMEDIATE BRACE POST

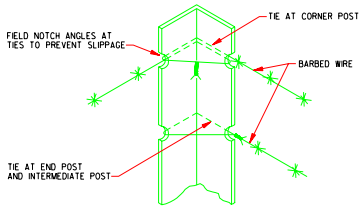

BARBED WIRE TIE DETAIL (STRUCTURAL ANGLE)

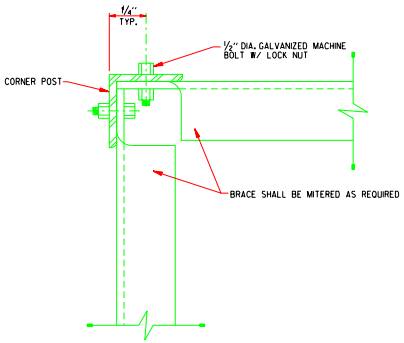

CORNER POST - BRACE CONNECTION DETAIL

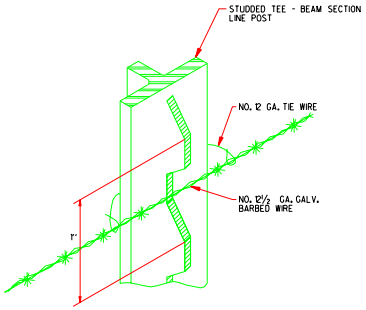

BARBED WIRE TIE DETAIL (STUDDED TEE)

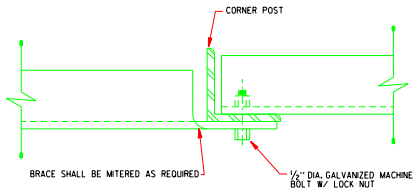

INTERMEDIATE POST - BRACE CONNECTION DETAIL

REV	DATE	DESCRIPTION	DWN	CKD	APP
	6-15-01	UDS MODS	EG FL		

P.O.
PROJECT NO.

U.S. DEPARTMENT OF ENERGY
KIRTLAND AREA OFFICE — ALBUQUERQUE, NEW MEXICO

SANDIA NATIONAL LABORATORIES

BARBED WIRE FENCE

P.O.
PROJECT NO.
DRAWN BY
CHECKED BY
SNL ENGR
DATE

CIVIL — STANDARD

SIZE D+ — DRAWING NO CJ1007STD — SEQ.

OLD FILE NAME: 101755A01

MICROSTATION FILE
FILE NAME: CJ1007STD.DGN
REFERENCE FILES:

"Property of Sandia National Laboratories Facilities Management and Operation Center (FMOC). No duplication or alteration allowed without the expressed permission and authorization of FMOC."