GENERAL NOTES

1. GATE, GATE SUPPORTS, AND GATE MOUNTING AND INSTALLATION ACCESORIES SHALL BE CONSTRUCTED AS SHOWN. THE CONTACTSOR SHALL FURNISH SHOP DRAWINGS FOR FOR EACH GATE INSTALLATION, INCLUDING GUIDE POST AND BRACING SIZE REQUIREMENTS.
2. SEE SANDIA STANDARD SPECIFICATION SECTION 02444 FOR FENCING MINIMUM REQUIREMENTS INCLUDING POSTS, FABRIC, FABRIC TIES, CLOSURES, BARBED WIRE, TENSION BARS, ETC.
3. SEE SANDIA STANDARD DRAWING 74457 OR 87435 FOR CONSTRUCTION OF LINE FENCE.
4. GATE FRAME SHALL BE 2" SQUARE ALUMINUM TUBING, ALLOY 6063 T-6 WITH A MINIMUM WALL THICKNESS OF 0.125". THE GATE FRAME SHALL BE ALL-WELDED CONSTRUCTION. ALL GATE BRACING SHALL BE DESIGNED BY THE MANUFACTURER. MINIMUM SIZE OF VERTICAL BRACING SHALL BE 1-1/4" SQUARE ALUMINUM TUBING WITH ALUMINUM WALL THICKNESS OF 0.125". DIAGONAL BRACING SHALL BE AS DESIGNED BY THE MANUFACTURER.
5. THE GATE SHALL BE INSTALLED TO PROVIDE EASY AND SMOOTH HAND OPERATION.

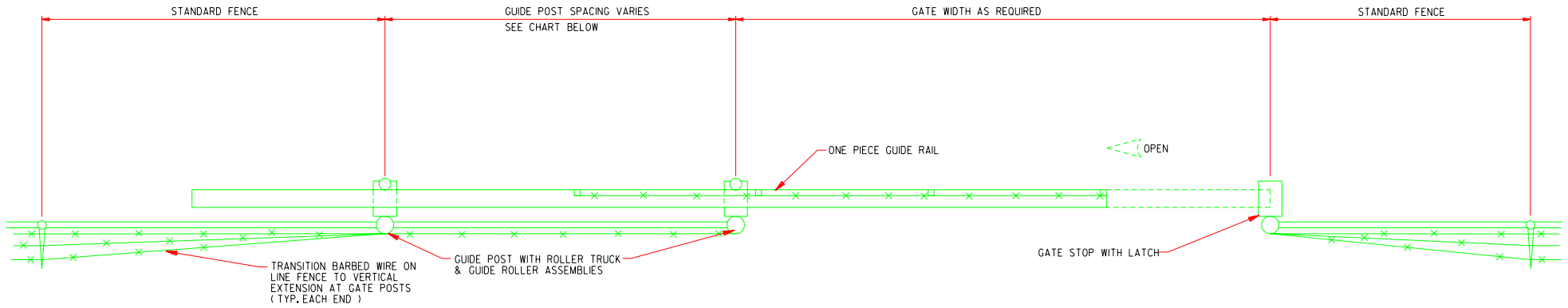

PLAN

N.T.S.

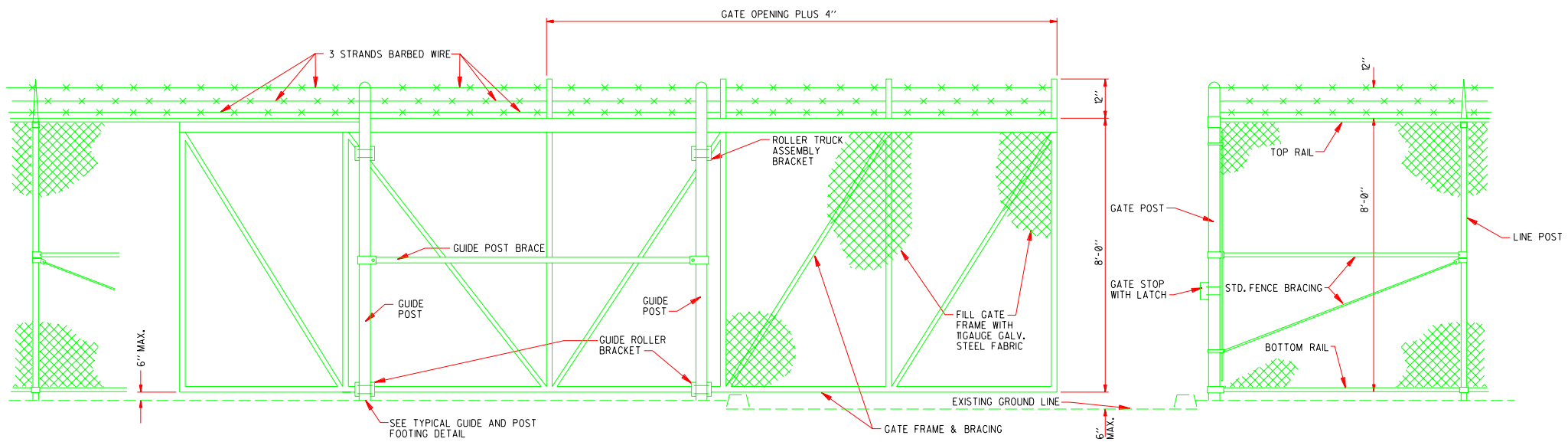

ELEVATION

N.T.S.

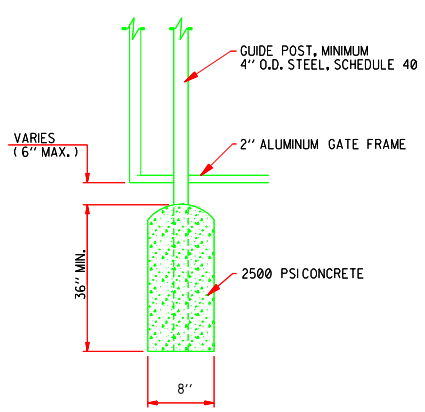

GUIDE POST SPACING CHART	
GATE OPENING	DISTANCE FOR POSTS
6'-0" TO 10'-0"	6'-6"
11'-0" TO 14'-0"	7'-6"
15'-0" TO 22'-0"	10'-0"
23'-0" TO 30'-0"	12'-0"

TYPICAL GUIDE & GATE POST FOOTING DETAIL

N.T.S.

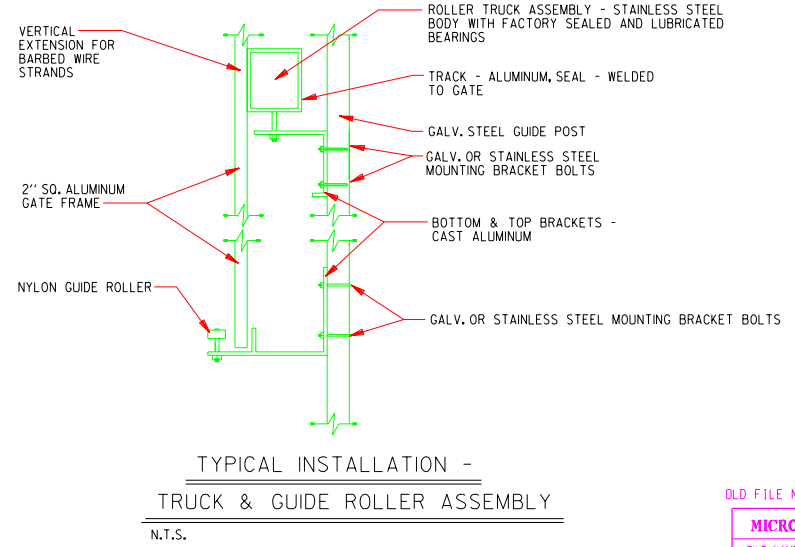

TYPICAL INSTALLATION - TRUCK & GUIDE ROLLER ASSEMBLY

N.T.S.

P.O. / PROJECT NO.	REV	DATE	DESCRIPTION	DWN	CKD	APP
		6-15-01	UDS MODS	EG FL		

U.S. DEPARTMENT OF ENERGY

KIRTLAND AREA OFFICE — ALBUQUERQUE, NEW MEXICO

SANDIA NATIONAL LABORATORIES

CANTILEVER SLIDE GATE

P.O.
PROJECT NO.
DRAWN BY
CHECKED BY
SNL ENGR
DATE

CIVIL — STANDARD

SIZE D+ — DRAWING NO CJ1006STD — SEQ.

OLD FILE NAME: 100861A01

MICROSTATION FILE

FILE NAME: CJ006STD.dgn

REFERENCE FILES:

Property of Sandia National Laboratories Facilities Management and Operation Center (FMOC). No duplication or alteration allowed without the expressed permission and authorization of FMOC.