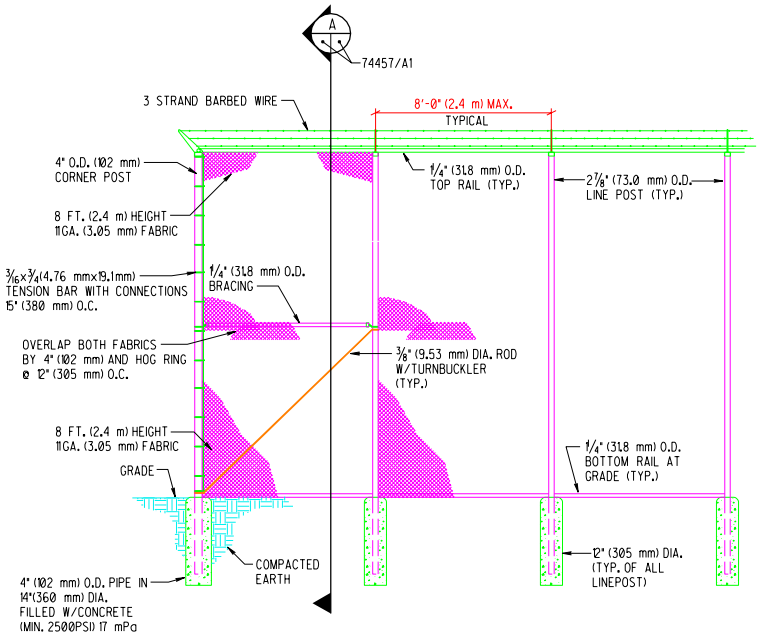

FRONT ELEVATION

SCALE: 1/4" = 1'-0"

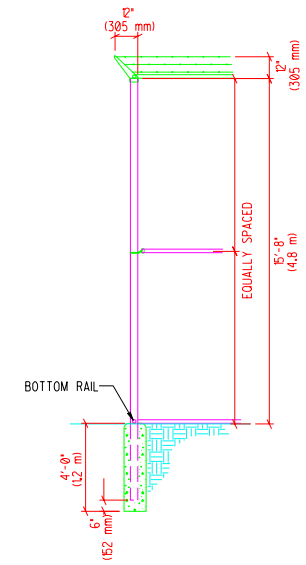

A SECTION

74457/A1

SCALE: 1/4"=1'-0"

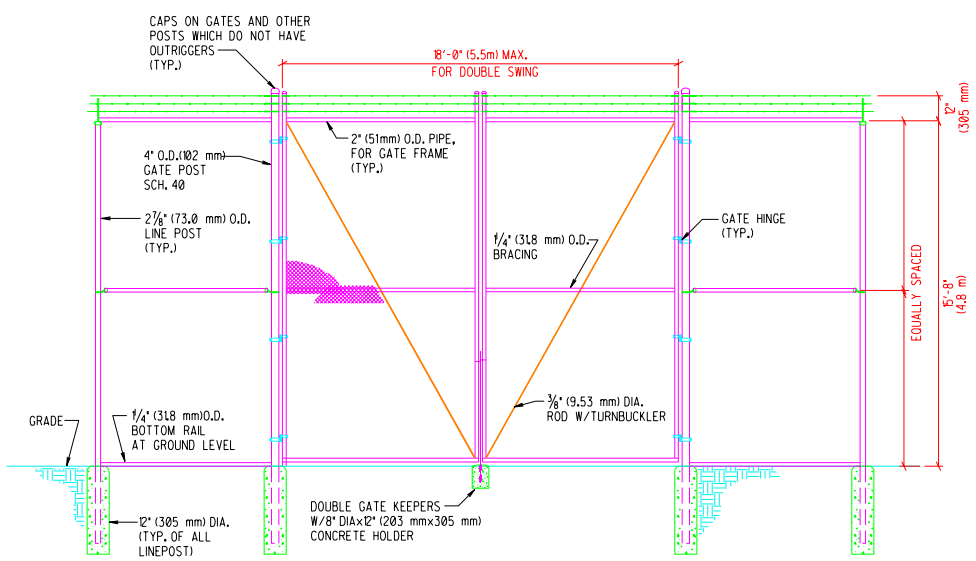

DOUBLE SWING GATE

SCALE: 1/4" = 1'-0"

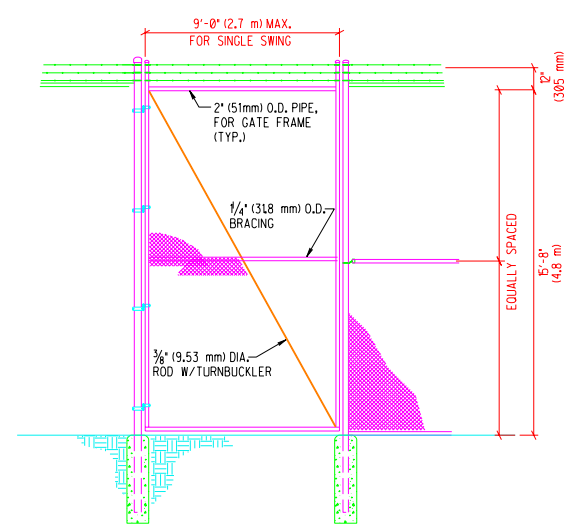

SINGLE SWING GATE

SCALE: 1/4" = 1'-0"

GENERAL NOTES

1. FENCE AND GATE FABRIC TO BE 2 PIECES OF 8' (2.4 m) HEIGHT 11 GA. (3.05 mm) MATERIAL, WOVEN IN A 2-INCH (51mm) MESH AND HEAVILY GALVANIZED. THE MATERIAL IS TO BE OVERLAPPED 4" (102 mm) AND HOG-TIED EVERY 12" (305 mm) USING 12 GA. (2.69 mm) GALVANIZED OR ALUMINUM WIRE.
2. ALL BARBED WIRE MUST BE NEW 12½GA. (2.51mm).
3. PERIMETER FENCING SHALL BE AS SHOWN EXCEPT THAT BOTTOM RAIL SHALL BE 6" (152 mm) BELOW GRADE
4. HOLD ALL FOOTINGS BELOW GRADE.
5. GATE STOPS TO BE PROVIDED FOR ALL GATES.
6. A DOUBLE GATE LATCH SHALL BE PROVIDED FOR EACH SET OF GATES. LOCKING DEVICES SHALL BE CONSTRUCTED SO THAT THE CENTER ROD OR PLUNGER BAR CANNOT BE RAISED WHEN THE GATE IS LOCKED. THE LATCHING DEVICES SHALL HAVE A PROVISION FOR A PADLOCK.
7. BRACING SHALL BE PROVIDED FOR EACH TERMINAL POST (END, CORNER, AND GATE) OR CHANGE IN ELEVATION. COMPLY WITH ASTM F567 STANDARD FOR INSTALLATION.
8. ALL PIPE TO BE GALVANIZED STEEL SCHEDULE 40.
9. ALL FABRIC TO BE FASTENED TO RAIL OR TENSION WIRE AT INTERVALS NOT EXCEEDING 24 IN. (610 mm).

P.O. PROJECT NO.	REV	DATE	DESCRIPTION	DWN	CKD	APP
	△					
	△					
	△					
	△	6-15-01	UDS MODS	EG FL		

U.S. DEPARTMENT OF ENERGY

KIRTLAND AREA OFFICE — ALBUQUERQUE, NEW MEXICO

SANDIA NATIONAL LABORATORIES

16' SECURITY FENCE

P.O.	
PROJECT NO.	
DRAWN BY	MAJ
CHECKED BY	
SNL ENGR	
DATE	8-95

CIVIL — STANDARD

SIZE D+ — DRAWING NO CJ1005STD — SEQ.

OLD FILE NAME: 074457A01

MICROSTATION FILE

FILE NAME: CJ005STD.dgn

REFERENCE FILES: BORDER3.dgn

"Property of Sandia National Laboratories Facilities Management and Operation Center (FMOC). No duplication or alteration allowed without the expressed permission and authorization of FMOC."