OLD FILE NAME: 093109A01

PREPARED BY:	SANDIA NATIONAL LABORATORIES FACILITIES ENGINEERING	DETAIL NO.: CJ1003
CHECKED BY:		SCALE:
DATE: 6-15-01 / REV: A	VEHICULAR CONTROL FENCE	CIVIL STANDARD

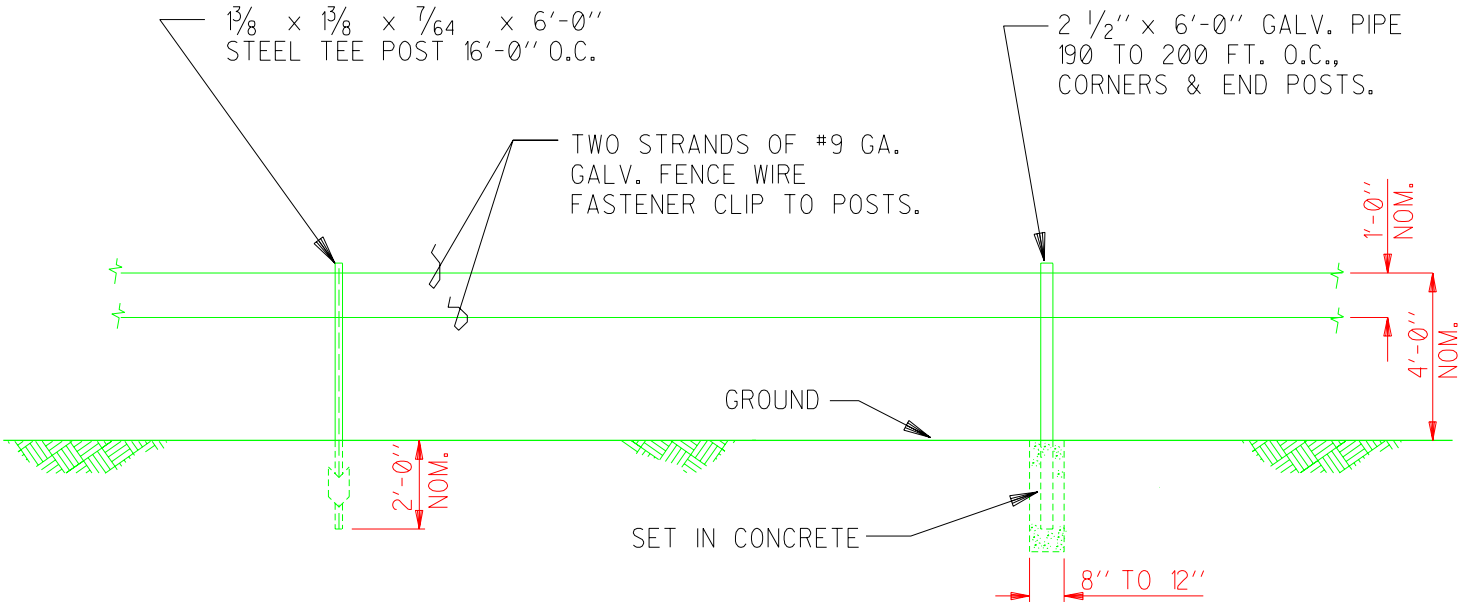

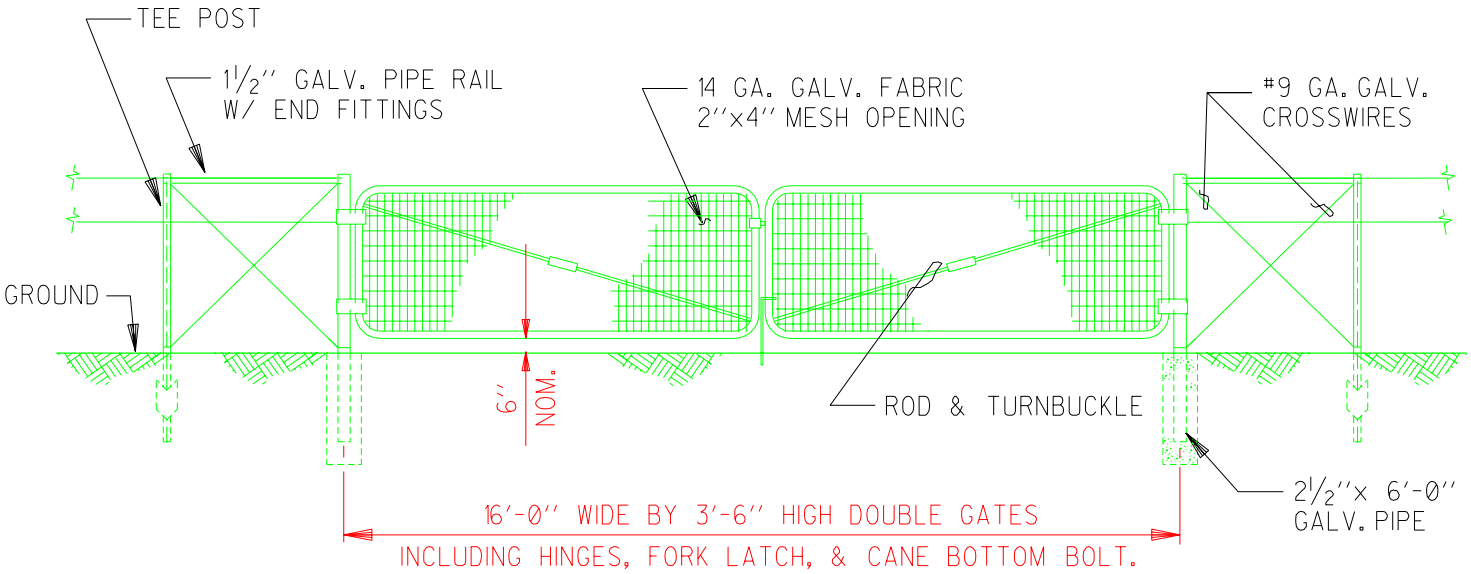

"Property of Sandia National Laboratories Facilities Management and Operation Center (FMOC).
No duplication or alteration allowed without the expressed permission and authorization of FMOC."