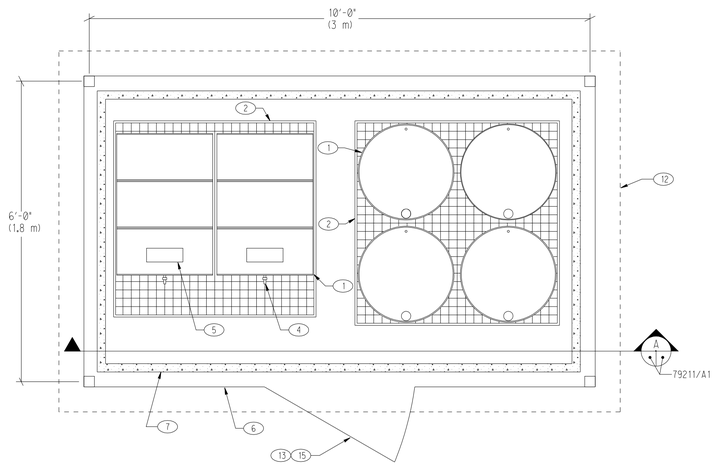

CHEMICAL STORAGE AREA PLAN

SCALE: 3/4" = 1'-0"

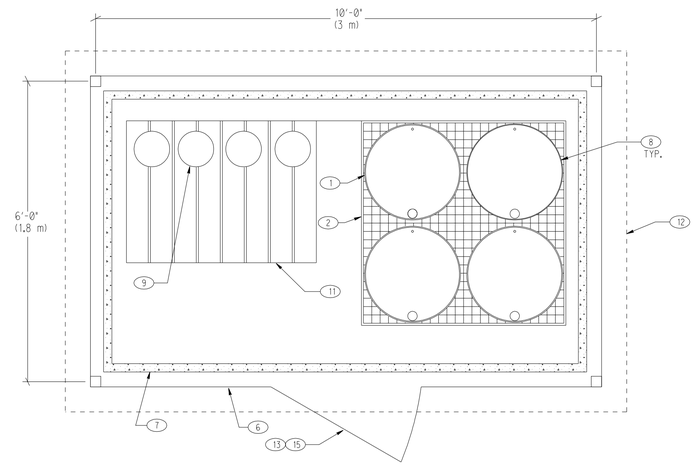

HAZARDOUS WASTE STORAGE AREA PLAN

SCALE: 3/4" = 1'-0"

KEYED NOTES

1. 55 GALLON (208 L) STORAGE DRUM (TYP.).
2. SPILL CONTAINMENT PALLET FOR LEAKS AND DRIPS (TYP.).
3. DRUM RACK (TYP.).
4. DRUM FAUCET FOR PROPER DISPENSING (TYP.).
5. LABEL CHEMICAL STORAGE CONTAINERS ON THEIR SIDE. LABELS TO BE SUPPLIED BY CONTRACTOR.
6. CONTROLLED PERIMETER CONTAINMENT FENCE (CHAIN LINK W/IMPERVIOUS COVERING OR PLYWOOD).
7. CONCRETE PAD W/ FORMED PERIMETER.
8. PROPER LABEL IDENTIFYING CONTENTS (TYP.). LABELS TO BE PLACED ON THE SIDE OF THE CONTAINER. SEE DETAIL 'B'.
9. STORAGE CONTAINERS (5 GAL.(19 L) OR GREATER) FOR SOLID WASTE.
10. NFPA-30 & FM APPROVED STORAGE CABINETS (AS REQUIRED).
11. WOOD PALLET FOR SOLID WASTE STORAGE.
12. SLOPED LEAK RESISTANT ROOF (SHINGLES, ROLLED ROOFING MATERIAL OVER PLYWOOD, ETC.)
13. LOCKABLE GATE.
14. ROOF COLUMN.
15. SIGNAGE 'CHEMICAL STORAGE AREA' OR 'HAZARDOUS WASTE STORAGE AREA'.

GENERAL NOTES

1. ALL SATELLITE WASTE GENERATOR SITES ARE REQUIRED TO COMPLY WITH THE FOLLOWING CONDITIONS:
   a) ALL WASTES MUST BE LISTED ON A CWDR FORM WITHIN 240 DAYS OF THEIR ACCUMULATION START DATE.
   b) NO MORE THAN 55 GALLONS (1 QUART ACUTE) ARE ALLOWED IN THE ACCUMULATION SITE. EXCESS AMOUNTS MUST BE REMOVED BY THE HAZAROUS WASTE FACILITY ON A CWDR WITHIN 3 CALENDER DAYS.
   c) ALL CHEMICALS AND WASTES MUST BE PROPERLY CONTAINED IN CONTAINERS. SECONDARY CONTAINMENT IS REQUIRED FOR LIQUID CHEMICAL AND WASTE CONTAINERS. PROVIDE WOOD PALLET FOR ALL SOLID WASTE STORAGE ONLY.
   d) ALL CONTAINERS MUST ALWAYS BE KEPT CLOSED EXCEPT WHEN IMMEDIATELY ADDING OR REMOVING CHEMICALS OR WASTE.
   e) ALL CHEMICAL AND WASTE CONTAINERS MUST BE PROPERLY SEGREGATED.
   f) ALL CHEMICAL AND WASTE CONTAINERS MUST BE PROPERLY LABELED.
2. THE SIZE OF STORAGE AREAS IS CONTINGENT UPON THE SPECIFIC JOB SITE REQUIREMENTS AND MAY BE CONSTRUCTED UNDER ONE COMMON ROOF AND WITHIN ONE COMMON PERIMETER CONTAINMENT AS LONG AS PROPER SEPARATION OF THE CONTAINMENT PADS IS PROVIDED. CONTRACTORS SHALL CONTACT FESH (7913) FOR APPROPRIATE SEPARATION DISTANCES.
3. STORAGE CABINET CAPACITY WILL VARY WITH JOB SITE REQUIREMENTS.
4. THE CONTRACTOR IS TO PROVIDE DETAILED DISTANCES WHEN COMBINING BOTH CHEMICAL STORAGE AREAS AND HAZARDOUS WASTE STORAGE AREAS UNDER ONE ROOF.

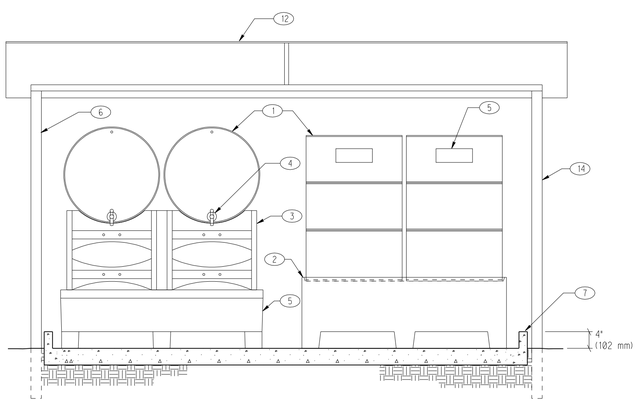

A ELEVATION

SCALE: 3/4" = 1'-0"

79211/A1 79211/A1

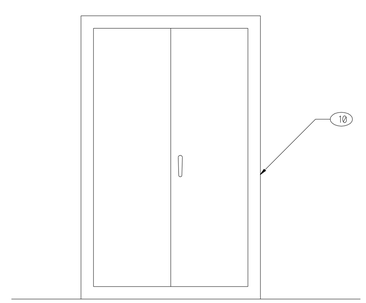

SAFETY CAN STORAGE CABINET

SCALE: 1 1/2" = 1'-0"

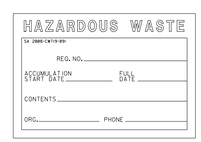

SMALL CONTAINER LABEL
JIT ORDER #699058

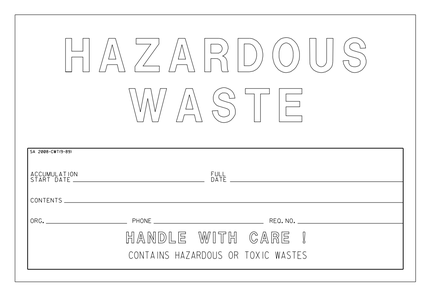

LARGE CONTAINER LABEL
JIT ORDER #699059

B DETAIL

SCALE: NONE

79211/A1 79211/A1

OLD FILE NAME: 079211/A01

OLD FILENAME:

FILENAME: AJ4001STD.dgn

REV	DATE	DESCRIPTION	DWN	CKD	APP
1	6-15-01	UDS MODS	EG FL		

P.O.
PROJECT NO.

U.S. DEPARTMENT OF ENERGY
NNSA/SANDIA SITE OFFICE ALBUQUERQUE, NEW MEXICO

SANDIA NATIONAL LABORATORIES

SATELLITE CHEMICAL STORAGE

P.O.	
PROJECT NO.	
DRAWN BY	MAJ
CHECKED BY	ILM
SNL ENGR	
DATE	11-95

ARCHITECTURAL STANDARD

SIZE	DRAWING NO	SEQ.
D+	AJ4001 STD	

"Property of Sandia National Laboratories Facilities Management and Operation Center (FMOC). No duplication or alteration allowed without the expressed permission and authorization of FMOC."