DOOR SCHEDULE

DOOR NO.	DOOR SIZE W/H/T	DOOR MAT'L	DOOR TYPE	DOOR GLASS W	DOOR GLASS H	DOOR LOUVER W	DOOR LOUVER H	FRAME MAT'L	FRAME TYPE	FRAME DETAILS HD	FRAME DETAILS JMB	FRAME DETAILS THSHD.	DOOR HARDWARE	LABEL	REMARKS

WINDOW SCHEDULE

WINDOW NO.	WINDOW SIZE W/H/T	WINDOW MAT'L	WINDOW TYPE	GLAZING	FRAME MAT'L	FRAME TYPE	FRAME DETAILS HD	FRAME DETAILS JMB	FRAME DETAILS SILL	WINDOW HARDWARE	LABEL	REMARKS

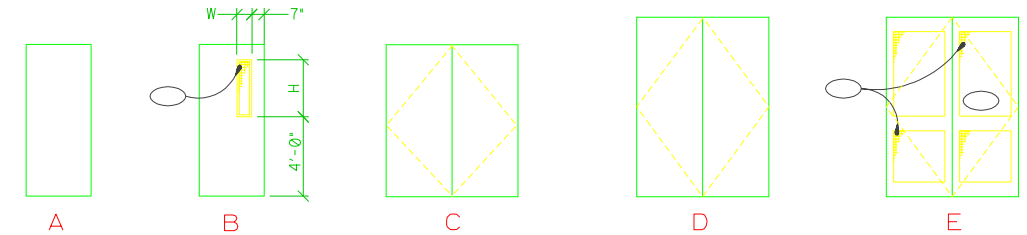

DOOR TYPES

SCALE: NTS

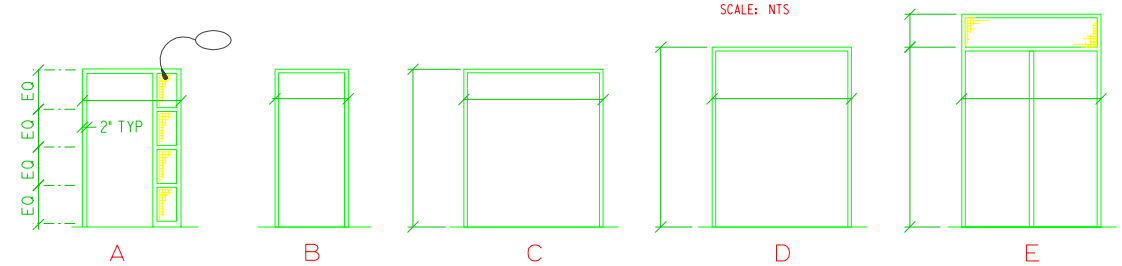

DOOR FRAME TYPES

SCALE: NTS

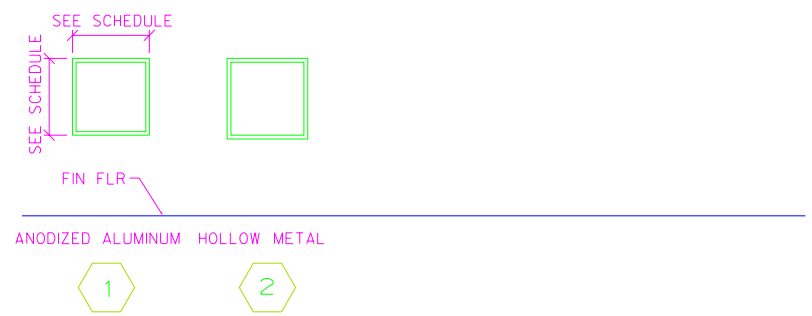

WINDOW FRAME TYPES

SCALE: NTS

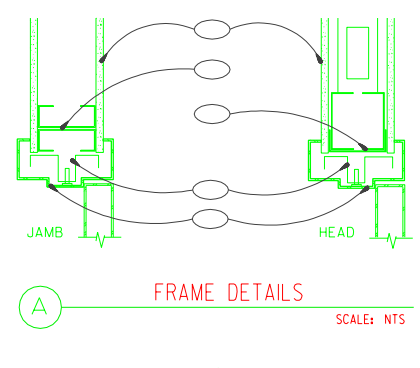

A FRAME DETAILS

SCALE: NTS

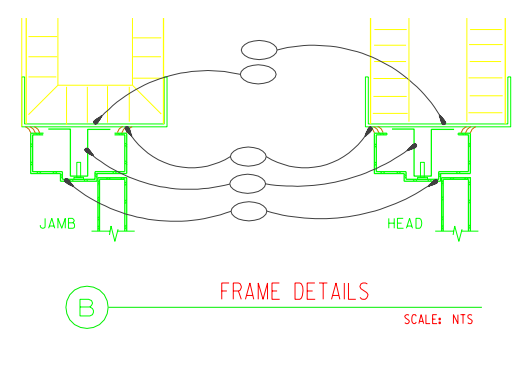

B FRAME DETAILS

SCALE: NTS

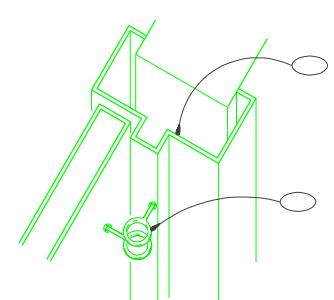

A DETAIL

SCALE: NTS

GENERAL NOTES

KEYED NOTES

HARDWARE LIST

P.O. PROJECT NO.	REV	DATE	DESCRIPTION	DWN	CKD	APP
	△					
	△					
	△					
	△	6-15-01	UDS MODS	EG FL		

U.S. DEPARTMENT OF ENERGY

KIRTLAND AREA OFFICE — ALBUQUERQUE, NEW MEXICO

SANDIA NATIONAL LABORATORIES

DOOR SCHEDULE

P.O.
PROJECT NO.
DRAWN BY
CHECKED BY
SNL ENGR
DATE

ARCHITECTURAL STANDARDS

SIZE D+ DRAWING NO AE6002STD SEQ.

OLD FILE NAME: DRSCHED.DGN

MICROSTATION FILE

FILE NAME: AE6002STD.dgn

REFERENCE FILES: BORDER.DGN

Property of Sandia National Laboratories Facilities Management and Operation Center (FMOC).
No duplication or alteration allowed without the expressed permission and authorization of FMOC.