HARDWARE SETS

IDR DOOR : (FIRE RATED 45 MIN.)

1/2 PR - STANLEY #FBB 179 4 1/2 x 4 1/2 BUTTS

1- SARGENT 28-10G04 LL LOCK SET (CL KEYWAY)

1- FOLGER ADAMS 712 x 24VDC x LCM ELECTRIC STRIKE

1- SARGENT 350-25-0 CLOSER

1- TRIMCO W1276-CCS WALL BUMPER

1SET - NGP #2525 SMOKE SEAL

1- 12" ALUMINUM KICK PLATE

1- NGP DOOR SWEEP #98V

NOTE:

1. HARDWARE FINISH TO MATCH EXISTING.
2. ADDITIONAL HARDWARE MAY BE ADDED AS REQUIRED.

DOOR AND FRAME PROFILES

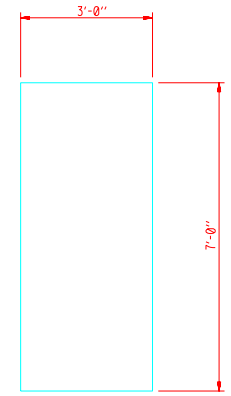

IDR DOOR

NOTES:

1. INSTALL NEW DOOR AND FRAME IN EXISTING FRAMED OPENING. FINISH EXTERIOR FLOORING EDGE TO EXTERIOR OF DOOR FACE. INSTALL FLOORING EDGE AND DOOR SWEEP ;ADJUST AS REQUIRED FOR
2. PROPER DOOR OPERATION.
3. SPRAY PAINT NEW FRAMES TO MATCH EXISTING FRAMES IN PROXIMITY.

   IDR DOOR AND FRAME TO BE 45 MINUTE FIRE RATED ASSEMBLIES.
4. PROVIDE ROOM NUMBERS ON DOOR FRAMES TO MATCH EXISTING CONDITIONS, FIELD COORDINATE.

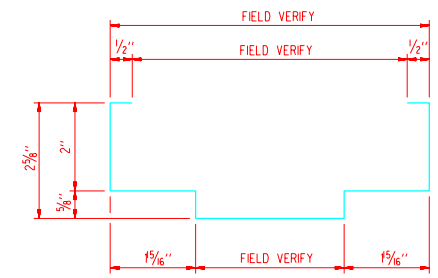

FRAME PROFILE

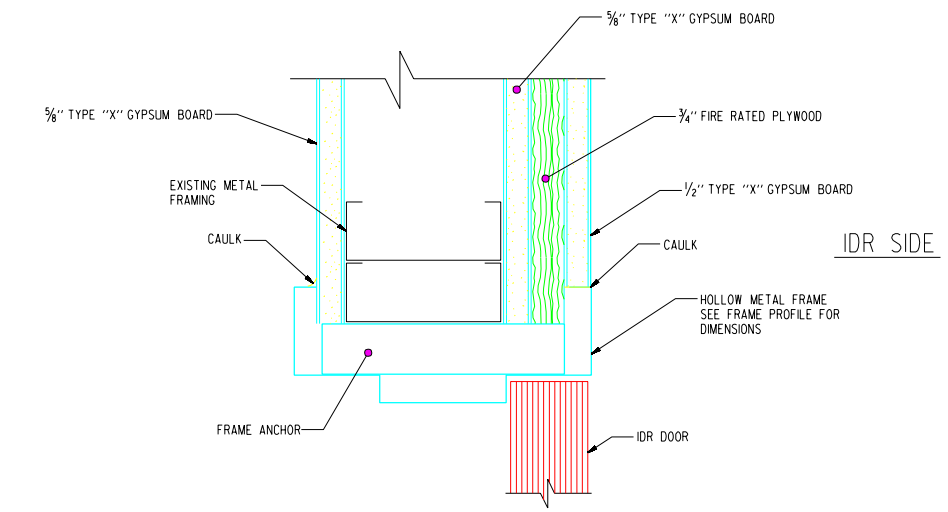

IDR SIDE

1 DETAIL - IDR DOOR JAMB/HEAD SIM.

DOORSCH 1 AE5032 SCALE: NTS

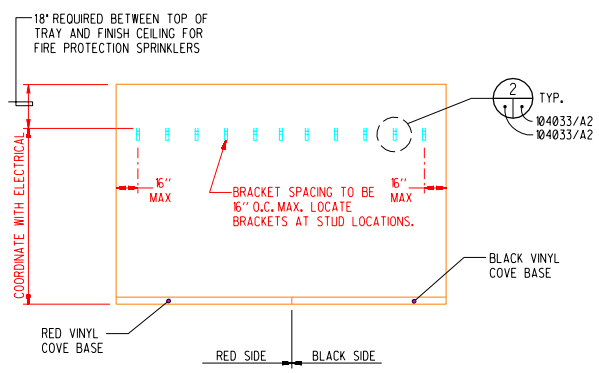

18 GA. STUDS

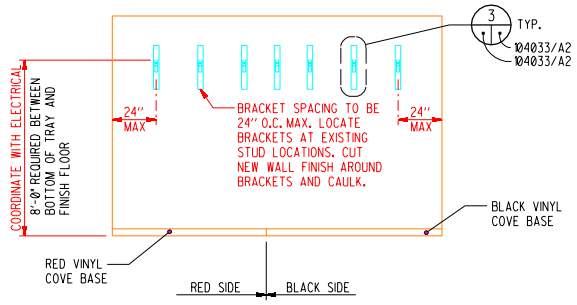

20 GA. STUDS

A ELEVATIONS - IDR CABLE TRAY BRACKET LOCATION

FLRPLAN AE5032 SCALE: NTS

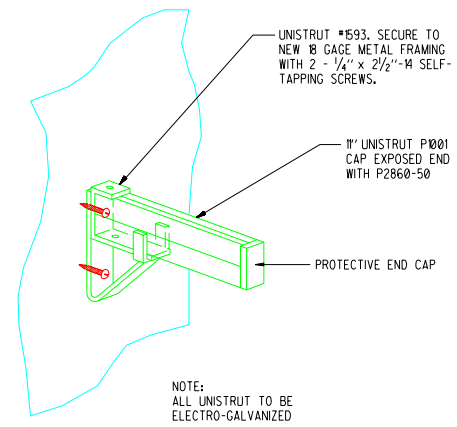

2 DETAIL - SUPPORT BRACKET @ 18 GA. STUDS

AE5032 AE5032 SCALE: NTS

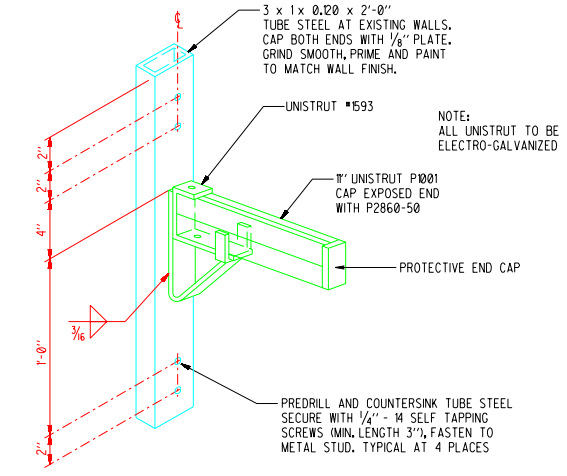

3 DETAIL - SUPPORT BRACKET @ 20 GA. STUDS

AE5032 AE5032 SCALE: NTS

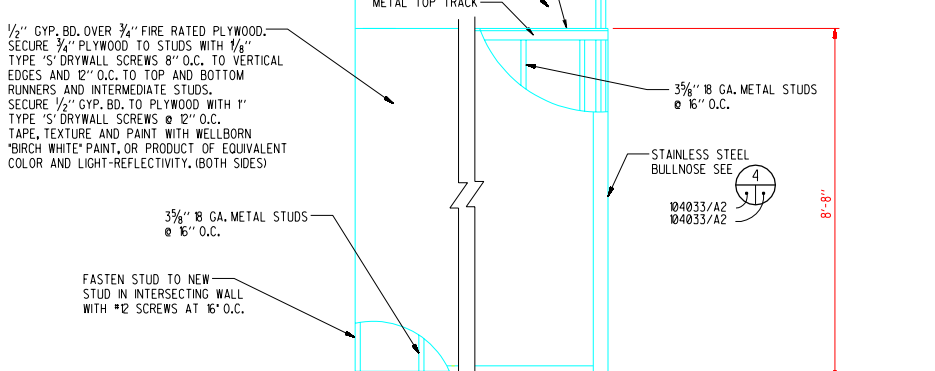

B ELEVATION - IDR CENTER EQUIPMENT WALL

FLRPLAN AE5032 SCALE: NTS

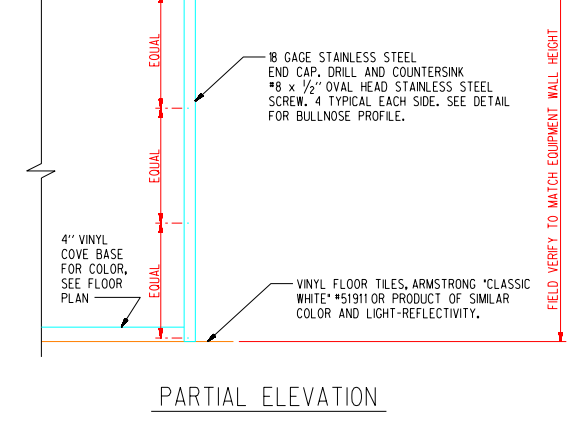

PARTIAL ELEVATION

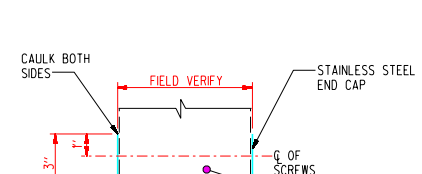

BULLNOSE PROFILE

NOTE:
STAINLESS STEEL BULLNOSE SHALL NOT HAVE BREAK PRESS DIE MARKS.

4 DETAIL - IDR STAINLESS STEEL BULLNOSE

AE5032 AE5032 SCALE: NTS

REV	DATE	DESCRIPTION	DWN	CKD	APP
C	9-1-01	UPDATES	ELG	JRP	
B	3/98	COMMUNICATIONS STD. MODS.	MAJ	NUE	
A	11/97	COMMUNICATIONS STD. MODS.	YMA	PD	

P.O. / PROJECT NO. EP0949

U.S. DEPARTMENT OF ENERGY

KIRTLAND AREA OFFICE — ALBUQUERQUE, NEW MEXICO

SANDIA NATIONAL LABORATORIES

COMMUNICATIONS IDR MISC. DETAILS

P.O.

PROJECT NO. ES3419

DRAWN BY MPW/H&N

CHECKED BY EC/H&N

SNL ENGR

ARCHITECTURAL — STANDARD — DATE 12-01-95

SIZE D+ — DRAWING NO AE5032STD — SEQ.

OLD FILE NAME: 104033/A2

MICROSTATION FILE

FILE NAME: AE5032STD.dgn

REFERENCE FILES: BORDER3.DGN

Property of Sandia National Laboratories Facilities Management and Operation Center (FMOC). No duplication or alteration allowed without the expressed permission and authorization of FMOC.