OLD FILE NAME: 100914/A1

PREPARED BY:	SANDIA NATIONAL LABORATORIES FACILITIES ENGINEERING	DETAIL NO.: AE5031
CHECKED BY:		SCALE: NONE
DATE: 6-15-01 / REV:	SIGN MOUNTING AND POST INSTALLATION	ARCHITECTURAL STANDARD

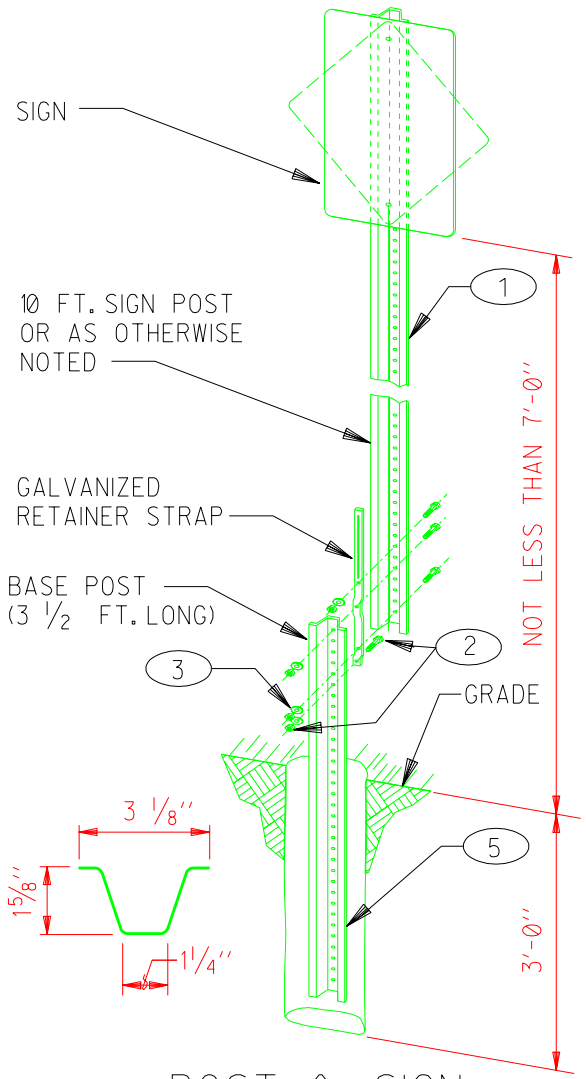

POST & SIGN

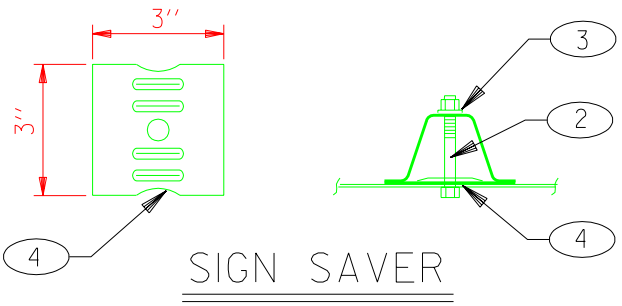

SIGN SAVER

KEYED NOTES:

1. SIGN POST ASSEMBLY INCLUDES SIGN POST, BASE POST, RETAINER STRAP, FOUR BOLTS AND NUTS. POSTS ARE PRODUCED FROM HIGH STRENGTH RAIL STEEL CONFORMING TO ASTM-A499-81, GRADE 60. GREEN BAKED ENAMEL FINISH, 7/16" HOLES ON 1 INCH CENTERS WT. 3 LBS. PER FT. X 10 FT. LONG POST COMPLETE, "EZE-ERECT" OR EQUAL. (ORDER INCLUDES 3 1/2 FT. LONG BASE POST.)
2. BOLT AND NUT ASSEMBLY, FOR CHANNEL POST. RAINBOW 03-120, 50 PER BOX OR EQUAL.
3. FLAT WASHER, FOR ITEM 2. RAINBOW 03-122, 100 PER BOX OR EQUAL.
4. SIGN SAVER, PREVENTS SIGN FROM BENDING. INSTALL BETWEEN SIGN AND CHANNEL POST, PLACING RIDGES TOWARD INSIDE OF POST HORIZONTALLY. SIGN SAVERS ARE .080 ALUMINUM. RAINBOW 03-137, OR EQUAL.
5. BASE POST SHALL BE DRIVEN 3 FT. INTO STABLE SOIL. IF SOIL WILL NOT SUPPORT THE SIGN POST AND SIGN UNDER A WIND LOAD THEN THE BASE POST SHALL BE SET IN CONCRETE.
6. BRACKETS FOR STREET NAME SIGNS (NOT SHOWN ON DRAWING). BRACKET FOR CHANNEL POSTS INCLUDES 2 SET SCREWS AND 2 HEX HEAD BOLTS. RAINBOW 45-419 OR EQUAL. 90 DEGREE BRACKET INCLUDES 4 SET SCREWS WT. 6 OZ. RAINBOW 45-4511 OR EQUAL.

GENERAL NOTES:

1. SEE SANDIA DWG. 100026 FOR SIGN LOCATION STD.
2. FOR ANY SIGN OR COMBINATION OF SIGNS LARGER THAN (8) SQ. FT. OF AREA, ORDER "EZE-ERECT" 4 LBS. PER FT. X 10 FT. LONG POST COMPLETE OR EQUAL.

"Property of Sandia National Laboratories Facilities Management and Operation Center (FMOC). No duplication or alteration allowed without the expressed permission and authorization of FMOC."