OLD FILE NAME: 099515/a1

PREPARED BY:	SANDIA NATIONAL LABORATORIES FACILITIES ENGINEERING	DETAIL NO.: AE5027
CHECKED BY:		SCALE: NONE
DATE: 6-15-01 / REV:	PIPE SEAL AT ROOF PENETRATIONS FOR BUILT-UP ROOFS	ARCHITECTURAL STANDARD

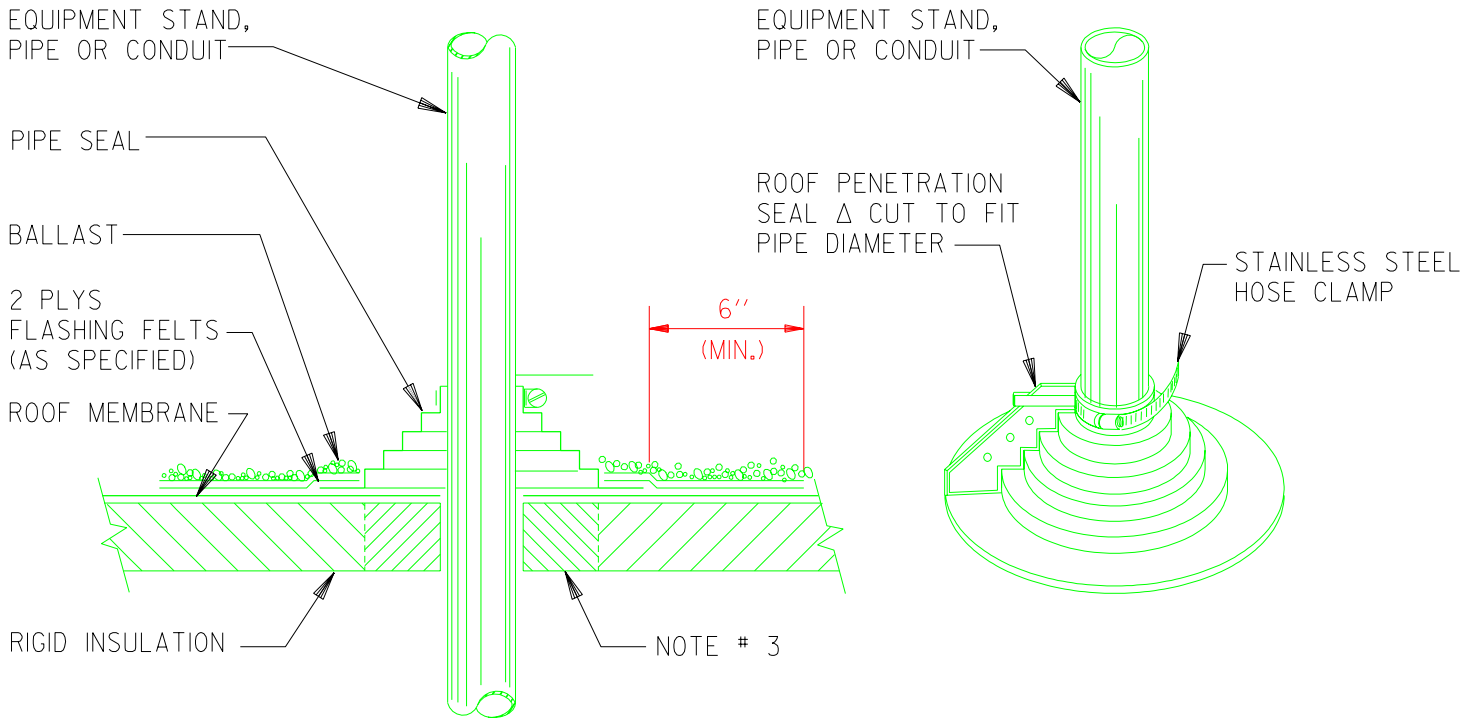

SECTION

ISOMETRIC

NOTES:

1. ROOF PENETRATION SEAL SHALL BE NEOPRENE RETROFIT STYLE BY ''PORTALS-PLUS'' (MODEL NO. RF-13 OR RF-36Δ AS APPLICABLE) WITH ADAPTER RING IF NECESSARY.
2. TO INSTALL SEAL, SCRAPE BACK ALL LOOSE GRAVEL (IF EXISTING) IN THE AREA TO BE FLASHED (2'-0'' MIN. FROM PENETRATION). REMOVE DIRT AND OTHER FOREIGN MATTER FROM THE SURFACE AND SET BASE OF SEAL IN ''POLYROOF'', THEN FLASH WITH ALTERNATE COURSES OF ''POLYROOF'' AND ''BUR-MESH'' (BOTH PRODUCTS BY TREMCO) AND RE-COVER FLASHING WITH BALLAST.
3. IF RIGID INSULATION IS CUT OUT FOR SETTING OF EQUIPMENT STAND BASE PLATE, AND VOID IS LARGER THAN BASE OF SEAL, FILL SPACE WITH RIGID INSULATION OR WOOD BLOCKING.

"Property of Sandia National Laboratories Facilities Management and Operation Center (FMOC). No duplication or alteration allowed without the expressed permission and authorization of FMOC."