OLD FILE NAME: 094173/A1

PREPARED BY:	SANDIA NATIONAL LABORATORIES FACILITIES ENGINEERING	DETAIL NO.: AE5024
CHECKED BY:		SCALE: AS NOTED
DATE: 6-15-01 / REV: A	ROOF MOUNTED EQUIPMENT STAND (FRAMING & ROOF PENETRATION DETAIL)	ARCHITECTURAL STDROF.DGN

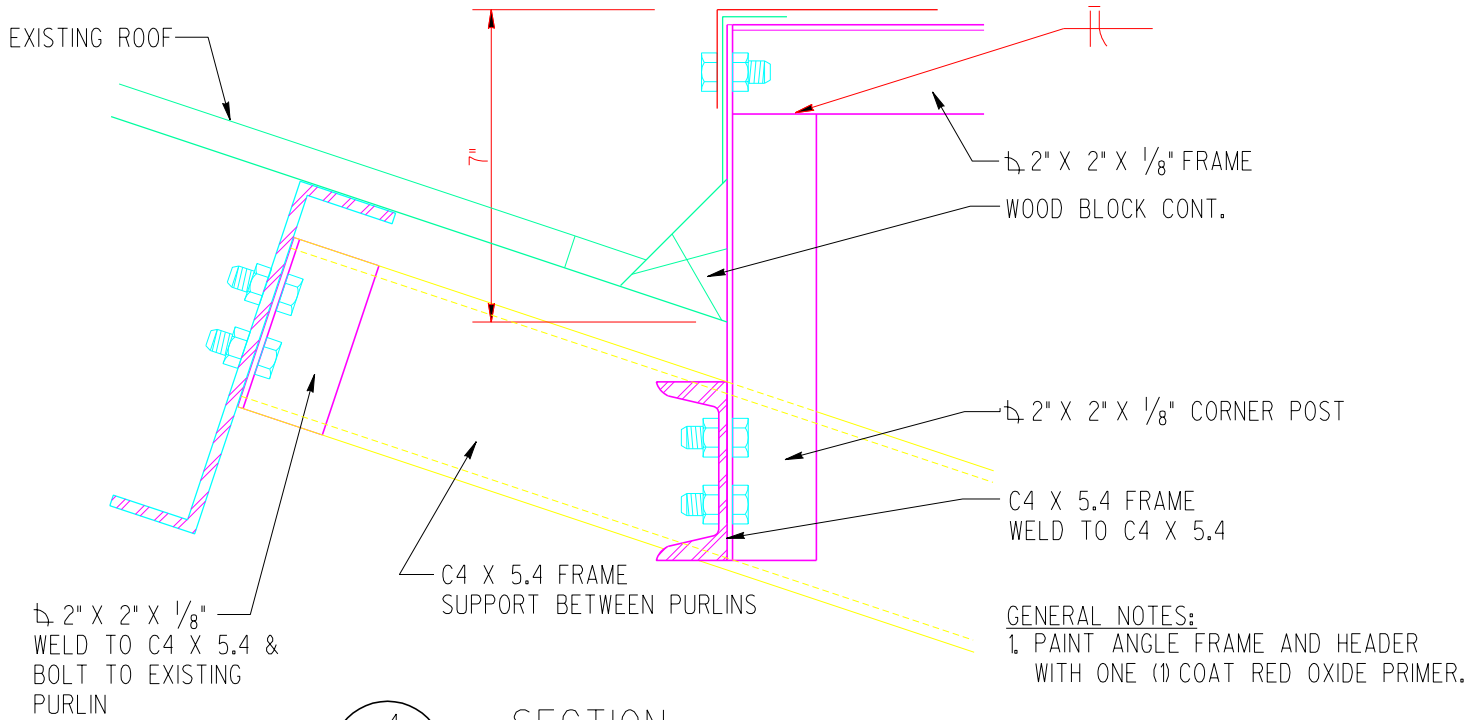

GENERAL NOTES:
1. PAINT ANGLE FRAME AND HEADER WITH ONE (1) COAT RED OXIDE PRIMER.

SECTION

SCALE: 3" = 1'-0"

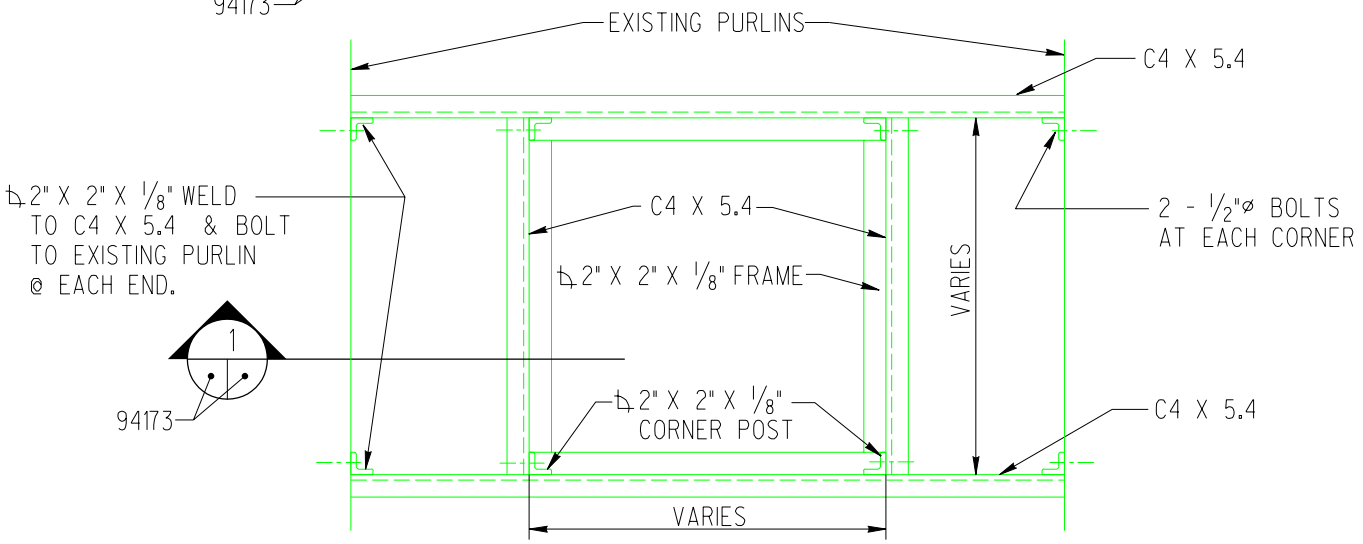

PLAN

SCALE: NONE

"Property of Sandia National Laboratories Facilities Management and Operation Center (FMOC).
No duplication or alteration allowed without the expressed permission and authorization of FMOC."