OLD FILE NAME: 094172/A1

PREPARED BY:	SANDIA NATIONAL LABORATORIES FACILITIES ENGINEERING	DETAIL NO.: AE5023
CHECKED BY:		SCALE: NONE
DATE: 6-15-01 / REV: A	ROOF MOUNTED EQUIPMENT STAND△ (PITCHED ROOF)	ARCHITECTURAL STDROF.DGN

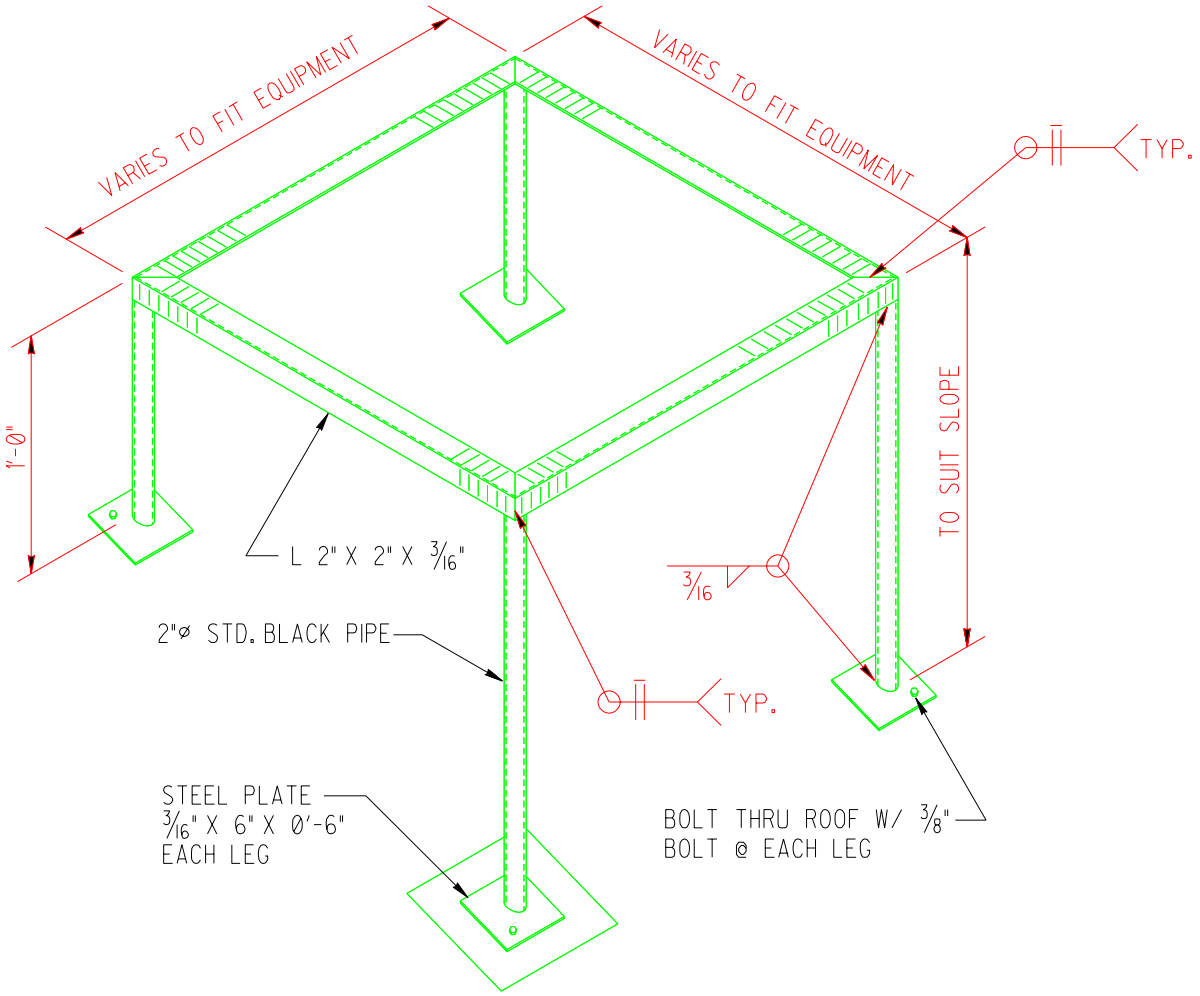

GENERAL NOTES

1. STAND SHALL BE FABRICATED AND FIELD FITTED TO EQUIPMENT.
2. WEIGHT OF EQUIPMENT NOT TO EXCEED 300 LBS.
3. PAINT ENTIRE STAND WITH ONE(1) COAT RED OXIDE PRIMER AND TWO (2) FINISH COATS OF ALKYD GLOSS ENAMEL, COLOR AS SPECIFIED.

"Property of Sandia National Laboratories Facilities Management and Operation Center (FMOC).
No duplication or alteration allowed without the expressed permission and authorization of FMOC."