OLD FILE NAME: 094169/A6

PREPARED BY: LMD	SANDIA NATIONAL LABORATORIES FACILITIES ENGINEERING	DETAIL NO.: AE5014
CHECKED BY: WJC		SCALE: 1½" = 1'-0"
DATE: 6-15-01 / REV:	LIGHTNING ROD ROOF MOUNTING	ARCHITECTURAL STDROF.DGN

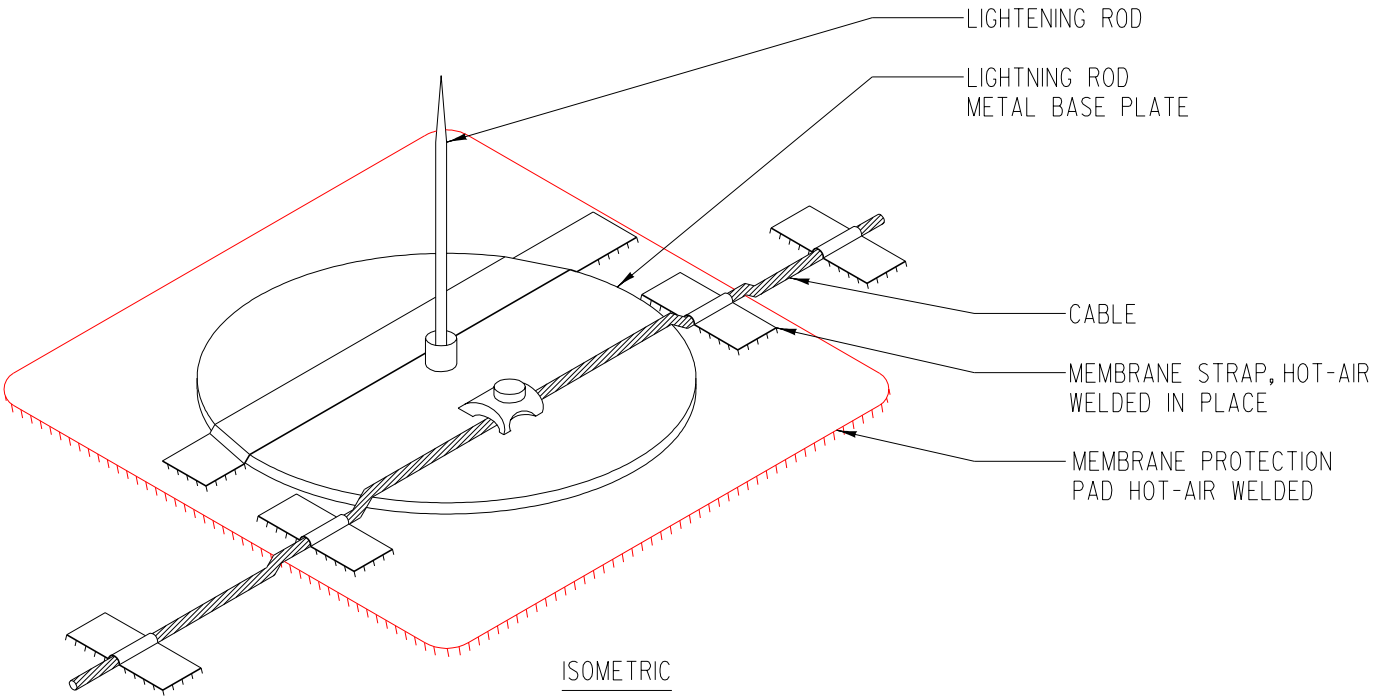

ISOMETRIC

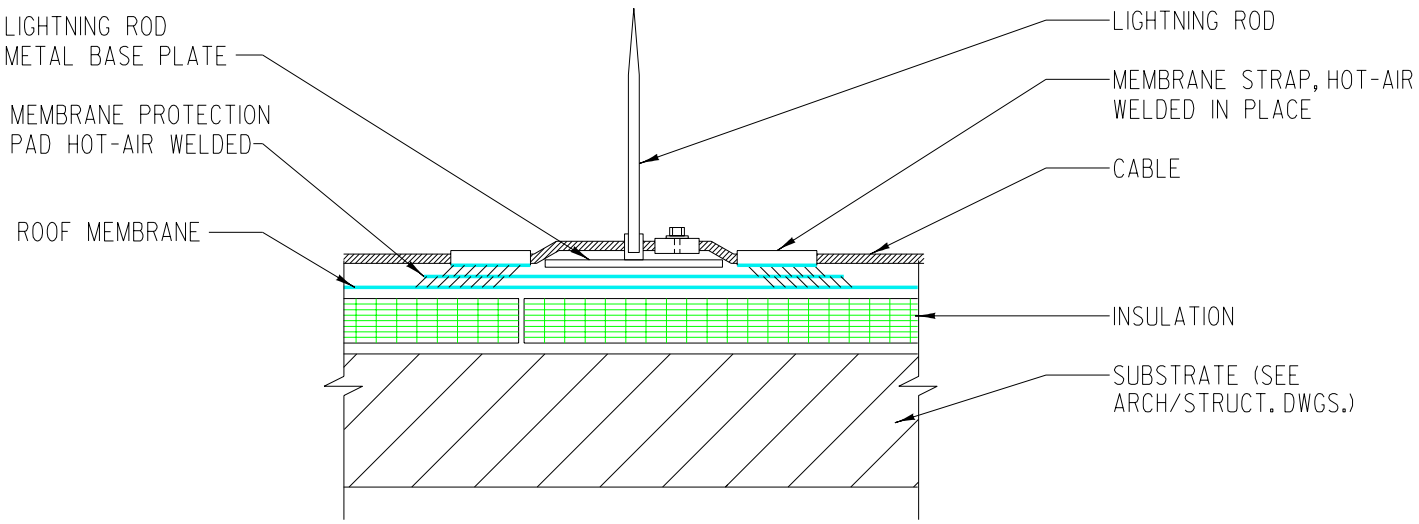

"Property of Sandia National Laboratories Facilities Management and Operation Center (FMOC).
No duplication or alteration allowed without the expressed permission and authorization of FMOC."