OLD FILE NAME: 094169/A1

PREPARED BY: YMA	SANDIA NATIONAL LABORATORIES FACILITIES ENGINEERING	DETAIL NO.: AE5013
CHECKED BY: WJC		SCALE: 1 1/2"=1'-0"
DATE: 6-15-01 / REV:	SPLASH BLOCK	ARCHITECTURAL STANDARD

AVALIABLE FROM: CREGO BLOCK CO.
6026 SECOND ST. N.W.
ALBUQ., N.M.

JC BALDRIDGE LUMBER CO.
8531INDIAN SCHOOL RD. N.E.
ALBUQ., NM

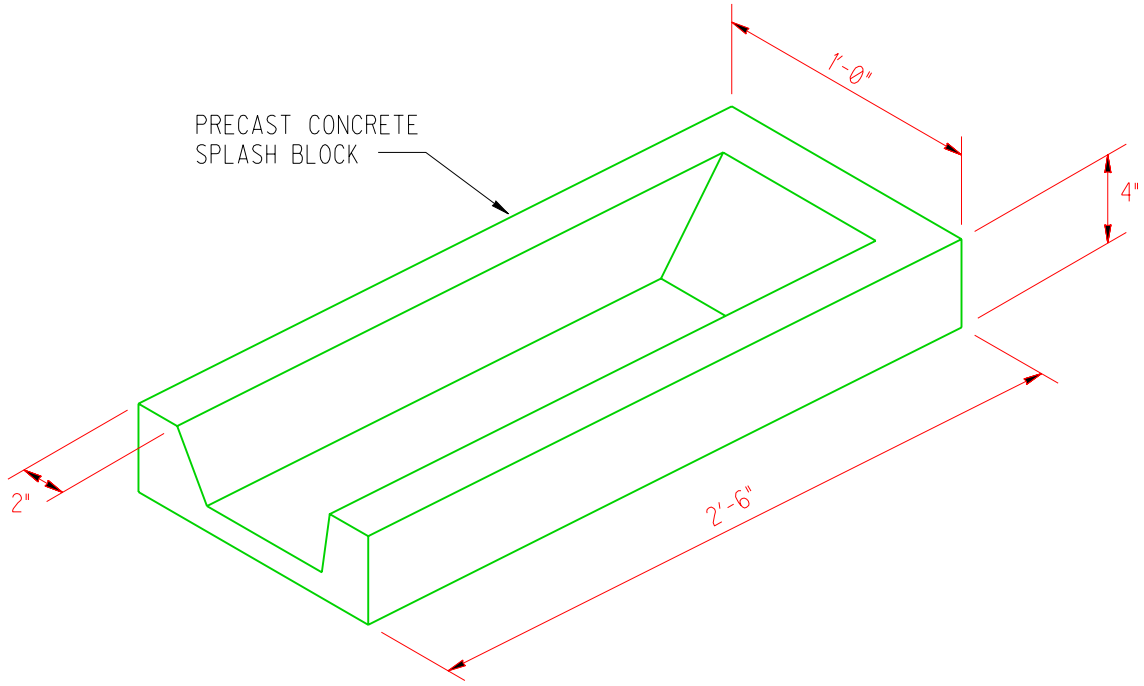

"Property of Sandia National Laboratories Facilities Management and Operation Center (FMOC).
No duplication or alteration allowed without the expressed permission and authorization of FMOC."