OLD FILE NAME: 094166/A2

PREPARED BY: YMA	SANDIA NATIONAL LABORATORIES FACILITIES ENGINEERING	DETAIL NO.: AE5012
CHECKED BY: WJC		SCALE: 3"=1'-0"
DATE: 6-15-01 / REV:	COLUMN FLASHING DETAIL	ARCHITECTURAL STDROF.DGN

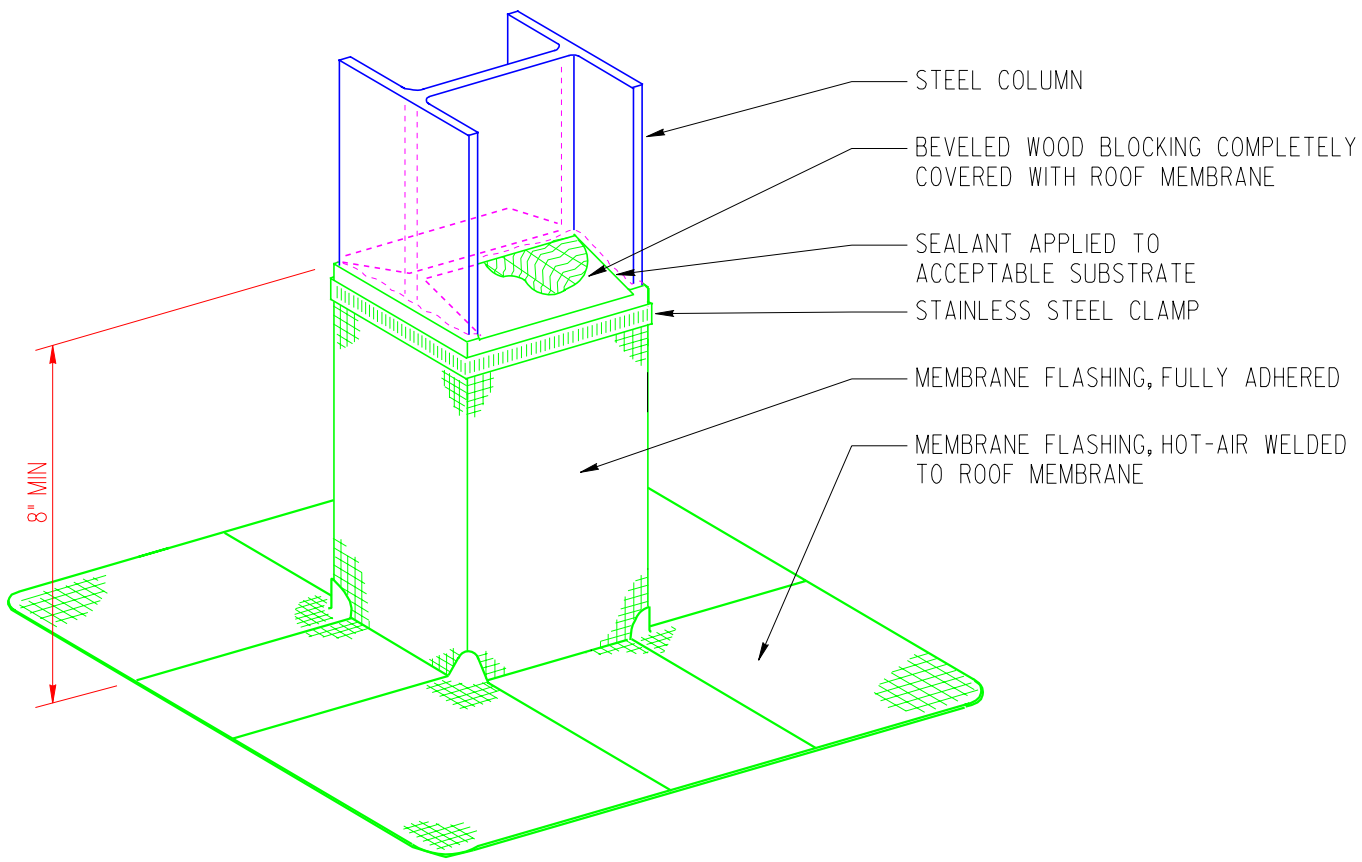

NOTE:

1. DOUBLE CHANNEL COLUMN SHALL BE FLASHED SIMILAR.
2. ANGLE IRON SHALL BE FLASHED SIMILAR.

"Property of Sandia National Laboratories Facilities Management and Operation Center (FMOC).
No duplication or alteration allowed without the expressed permission and authorization of FMOC."